Konica FT-1 MOTOR

TECHNICAL REPAIR MANUAL

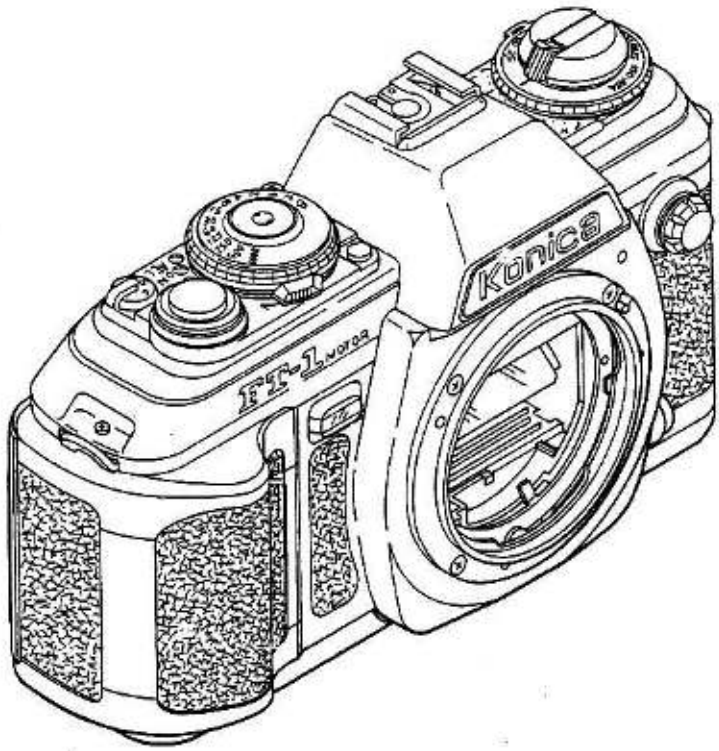

CONTENT

1. SPECIFICATIONS OF THE FT-1 MOTOR 1

2. MECHANISM OF EACH ASSEMBLY 3

2-1 GENERAL OUTLINE OF EACH ASSEMBLY 3

2-1-1 Position of major assemblies fitted 3
2-1-2 Block diagram of major functional sequences 3
2-1-3 Time chart for operation of each unit 5

2-2 WIND MECHANISM 8

2-2-1 Film wind drive mechanism 8
2-2-2 Film wind mechanism 9
2-2-3 Film auto-loading mechanism 10
2-2-4 Film transport check mechanism 10
2-2-5 Shutter charge mechanism 11
2-2-6 Reverse prevention mechanism 12

2-3 COUNTER MECHANISM 13

2-4 RELEASE MECHANISM 14

2-4-1 Position of release 14
2-4-2 Operation after release 15
2-4-3 S/C changing, AEL mechanism 16

2-5 MIRROR BOX 17

2-5-1 Features 17
2-5-2 Diaphragm control mechanism 17
2-5-3 Diaphragm detecting mechanism 18
2-5-4 Diaphragm restoring mechanism 19
2-5-5 Mirror driving mechanism 20

2-6 BACKLID OPENING AND CLOSING MECHANISM 21

2-7 BATTERY CASE 22

2-7-1 Mounting of battery case to camera body 22
2-7-2 Dismounting of battery case from camera body 22
2-7-3 Batteries used 22

2-8 FINDER MECHANISM 23

A

2-9 SELF-TIMER 24

2-10 HOT SHOE 24

2-11 REMOTO CONTROL SOCKET 25

2-12 TTL-AE MECHANISM 25

2-12-1 Indications in the finder 25
2-12-2 Picture-taking in AE mode 27
2-12-3 Picture-taking in manual mode 28
2-12-4 Exposer compensation 28
2-12-5 Table of coupling ranges 29
2-12-6 Signal feeding 29
2-12-7 Input of F-stop values and position for low-internsity warning 30

3. KEY POINTS FOR ASSEMBLY AND ADJUSTMENT 31

3-1 FILM WIND MECHANISM 31

3-1-1 Mounting of motor driving unit 31
3-1-2 Assembling of film wind unit 31
3-1-3 Mounting of film wind unit 32
3-1-4 Assembling of counter 33
3-1-5 Mounting of film counter unit 33
3-1-6 General check 34

3-2 MIRROR BOX 35

3-2-1 Assembling of shutter charge baseplate subassembly 35
3-2-2 Assembling of diaphragm driving gear baseplate subassembly 36
3-2-3 Assembling of diaphragm detecting gear baseplate 36
3-2-4 Assembling of mirror box's lower unit 37
3-2-5 Assembling of front unit 38
3-2-6 Assembling of mirror box 40
3-2-7 Assembling of penta-prism unit 47
3-2-8 Fitting of penta-prism unit and focal adjustment of finder 48

3-3 ASSEMBLING OF BODY UNIT AND MIRROR BOX UNIT 48

3-3-1 Care about assembling 48

B

3-4 MOUNTING OF ASA RESISTOR 49
3-4-1 Check of ASA resistor 49
3-4-2 Mounting of ASA resistor 50
3-5 MOUNTING OF AE AMPLIFIER 50
3-6 MOUNTING OF T RESISTOR 51
3-6-1 Check of T resistor 51
3-6-2 Mounting of T resistor 51
3-7 MOUNTING OF TOP COVER 52
3-7-1 General check 52
3-7-2 Care about mounting 52
3-8 AE ADJUSTMENT 53
3-8-1 Adjustment of output voltage at VO2 53
3-8-2 Level adjustment 53
3-8-3 Exposure adjustment 54
3-9 ASSEMBLING OF BACKLID UNIT 54
3-10 HOW TO CAMERA CHECKER AND PULSE COUNTER 55
3-10-1 Name of each part of camera checker 55
3-10-2 Name for pulse counter 57
3-10-3 Method of use 57
3-10-4 Use of connector cord 59
3-10-5 General care for assembling 59
3-10-6 Switching of input voltage 59
3-11 AE AMPLIFIER 61
3-11-1 Circuit diagram 61
3-11-2 Names, functions and voltage values of main terminals on AE amplifier 62
3-11-3 Pattern on AE amplifier 63
3-11-4 Pattern on Hybrid I.C 64
3-11-5 Description of terminal function 65
3-11-6 Basic adjustment of AE amplifier 69
3-12 MOTOR DRIVE AMPLIFIER 73
3-12-1 Names, functions and voltage values of main terminals on motor driving amplifier 73

C

3-12-2 Method of simple check on motor driving amplifier 73
3-12-3 Pattern on motor driving amplifier 74
3-12-4 Description of terminal function 75

4. HOW TO REPAIR

HOW TO USE REPAIR MANUAL 78
CASE FOR HANDLING OF ELECTRONIC PARTS 82
ELECTRICAL PARTS CHECK METHOD 84
CHECK SHEET 87

4-1 FILM WIND 88

4-1-1 Auto-loading system does not operate 88
4-1-2 Poor auto-loading 93
4-1-3 Excessive auto-loading 95
4-1-4 Indequate auto-loading 97
4-1-5 Winding system does not operate 99
4-1-6 Wind motor continuous rotation 103
4-1-7 LED showing the film tension does not turned ON 107
4-1-8 LED showing the film tension does not turned OFF 109
4-1-9 Space between pecture frame is not even 111
4-1-10 Film is not taken up 114
4-1-11 Abnormal rotation of wind motor 115
4-1-12 Continuous shooting is done at S mode 117
4-1-13 Continuous shooting cannot be at C mode 119

4-2 MIRROR BOX 123

4-2-1 Mirror fails to raise 127
4-2-2-1 Mirror remains flipped up 127
Factor: Diaphragm ring in initial position, shutter set
4-2-2-2 Mirror remains flipped up 131
Factor: Diaphragm ring unreturnable shutter set
4-2-2-3 Mirror remains flipped up 133
Factor: Diaphragm ring unreturnable, shutter not set (Mirror box motor does not turn.)
4-2-2-4 Mirror remains flipped up 137
Factor: Diaphragm ring unreturnable, shutter opened

D

4-2-3 Lens is always set to smallest aperture in AE mode 138

4-2-4 Lens is always set to largest aperture in AE mode 145

4-2-5 Diaphragm control of diaphragm ring is unstable 150

4-2-6 Diaphragm ring unreturnable to original position 159

4-2-7 Mirror box motor does not stop 163

4-2-8 Diaphragm ring does not smoothly operate 169

4-3 SHUTTER 173

4-3-1 Shutter stops halfway 173

4-3-2 Shutter does not open or remains open 175

4-3-3 Shutter speed is defective 179

- Shutter speed is unstable.
- Shutter speed always slips off in one and the same direction.
- Shutter speed is always highest.
- Shutter speed is always "B".

4-3-4 Shutter cannot be set 182

4-4 RELEASE 183

4-4-1 F1.0 or F22 is turned on and flickers with 1st-step depression of release button 183

4-4-2 LED in the viewfinder is not turned on with 1st-step depression of release button 189

4-4-3 LED always flickers at F5.6 or F11 with 1st-step depression of release button 193

4-4-4 LED does not flicker at F5.6 or F11 with 1st-step depression of release button when dedicated electronic flash is mounted 195

4-4-5 LED in the viewfinder remains turned on without release button depressed 199

4-4-6 All LED's are turned on and flicker in the viewfinder with 1st-step depression of release button 201

4-4-7 M-LED flickers with 1st-step depression of release button in AE mode 203

4-4-8 LED in the viewfinder is not turned on in right position with 1st-step depression of release button 205

4-4-9 Battery check LED does not flicker when battery cells have run down 207

4-4-10 Battery check LED flickers even when battery cells are in normal condition 209

E

4-4-11 Camera does not operate with 2nd-step depression of release button 211

Factor: LED in the viewfinder is turned off

4-4-12 Camera does not operate with 2nd-step depression of release button 215

Factor: LED in the viewfinder remains turned on

4-4-13 Camera starts operating with 1st-step depression of release button 219

4-4-14 M-LED does not flicker in manual mode with 1st-step depression of release button 221

4-4-15 Self-LED flickers with 2nd-step depression of release button 223

4-4-16 Camera operates naturally 225

4-4-17 AE does not lock 229

4-4-18 Main switch cannot be turned ON 231

4-5 FINDER 233

4-5-1 Focusing defective at ∞ 233

4-5-2 Imaged tilted, blurred on one side, oxis shitted 235

4-6 COUNTER 236

4-6-1 Film counter unreturnable to original position 236

4-6-2 Film counter does not advance 239

4-7 SELF-TIMER 241

4-7-1 Self-timer LED remains turned on 241

4-7-2 Camera is put into operation, instead of being set to self-timer mode, even when self-timer button has been depressed 243

4-7-3 Camera operate without self-timer LED turned on after about 10 seconds 245

4-7-4 Self-timer LED does not turned on, nor is shutter released 247

4-7-5 Self-timer LED turned on after shutter does not running 249

4-8 SYNCHRO CIRCUIT 251

4-8-1 Defective electric flow of synchro terminal circuit 251

4-8-2 Nonconduct electric flow of hot shoe circuit 253

4-8-3 Aperture and shutter speed are unstable with dedicated electronic flash unit mounted or camera cannot be set to EF mode in AE photography 255

F

4-9 REWIND 257

4-9-1 Rewind button unreturnable to original position 257

4-9-2 Rewind button fail to lock into position 257

4-9-3 Sluggish rewind action 259

4-10 BACKLID 261

4-10-1 Backlid fails to properly open and close 261

4-11 BATTERY CASE 263

4-11-1 Battery case's conduction is improper 263

4-11-2 Abnormal rundown of battery cells 264

4-12 AE'S PRECISION 265

4-12-1 AE lacks in precision 265

5. FT-1MOTOR OF PRODUCTS STANDARD EXCERPT 269

1. SPECIFICATIONS OF THE FT-1 MOTOR

1. TYPE:	35mm TTL-AE focal-plane single reflex camera.
2. FILM:	35mm (135), in cartridge.
3. PICTURE SIZE:	24 x 36mm.
4. STANDARD LENS:	Hexanon AR50mm F/1.8 (6 elements in 5 groups), Closest taking distance 0.55m.
5. MOUNT:	Konica Bayonet Mount II, 47mm in diameter, 40.5mm in flange back.
6. APERTURE MECHANISM:	AE type fully automatic aperture, Smallest aperture at F22.
7. SHUTTER:	Digitally-controlled, vertically running metal focal plane shutter. Copal Square EM-573. B, 2, 1 ~ 1/1000 sec, multiple train equal spacing graduations.
8. SYNCHRO:	X contact, synchronized from 2, 1 ~ 1/100 sec. Dedicated electronic flush (X-18, X-24, X-36) Automatically set to 1/100 sec in automatic mode; manually set to 2 ~ 1/60 sec in manual mode. With electronic flash other than X-18, X-24, X-36, manually set to 2 ~ 1/60 sec.
9. SELF-TIMER:	Electronic, operation checked by LED flickering. Operation about 10 sec. (Possible to halfway cancel) Start to 4 sec.....flickering in 1 cycle 4 ~ 8 sec.....flickering in 2 cycles 8 ~ 10 sec.....flickering in 4 cycles
10. VIEWFINDER:	Eye-level viewfinder with pentaprism, magnification 0.81 (50mm F1.8 lens ∞), field of view 92%, fresnel lens. Image matching type using a combination of micro dia-prism, split image In viewfinder Dot LED shown for M (manual), F1.4 ~ F22 LED flickering for low light intensity at M and F1.4 (also serving for index point for stopped-down metering), LED flickering for high light intensity at F22 Battery check indicated by alternative flickering of low-intensity LED and LED at F22 LED at F5.6 or F11 flickering for dedicated electronic flash's full charge.

11. EXPOSURE CONTROL:

TTL metering at the full lens opening, priority to shutter speed aperture control.

Light intake with GaAsP (gallium arsenide phosphide).

- o Fully automatic aperture AE lens (metering at the full lens opening)

  priority to shutter speed in AE mode, automatic control of correct aperture;

  in manual mode, reading of correct F-stop value coupled to film speed, shutter speed and F-stop value at the full lens opening.

- o Manual aperture lens (stopped-down metering):

  alignment with index points coupled to film speed, shutter speed and aperture.

- o Exposer rectify ±2EV ASA(ISO)100 ~ ASA(ISO)800

  ASA(ISO)25 of -2EV

  ASA(IS))3200 of +2EV

- o With AE lock mechanism

12. AE COUPLING RANGE:

EV0 (F1.4 at 2 sec) ~ EV19 (F22 at 1/1000 sec) with ASA(ISO)100

EV0.7 (F1.8 at 2 sec) ~ EV19 (F22 at 1/1000 sec) with ASA(ISO)100

13. FILM SPEED RANGE:

ASA(ISO)25 ~ ASA(ISO)3200

14. FILM LOADING:

Auto-load system.

15. FILM WIND:

- o Automatic wind with buil-in motor (inspool), standard speed approx 1.8 f. P. S. (Using new batteries LR03)
- o S (Single), C (Continue) changeable

16. FILM REWIND:

Crank type, rewind button automatically returns to original position.

17. FILM COUNTER:

Counts number of frames exposed;

Automatically returns to original position.

18. POWER SOURCE SWITCH:

OFF, ON, AEL changeable of three position.

19. POWER SOURCE:

Four LR03 or LR6 alkali-manganese dry cells (1.5V).

Also serves as film wind and exposure control.

20. OTHERS:

- o Automatic switchable to synchro mode with mounting of dedicated electronic flash (X-18, X-24, X-36).
- o Equipped with film transport checker.

21. DIMENSIONS AND WEIGHT:

With F1.8 lens: 143 (W) x 91 (H) x 78 (T) mm, 740g (Without batteries)

Body only : 143 (W) x 91 (H) x 46 (T) mm, 570g (Without batteries)

2. MECHANISM OF EACH ASSEMBLY

2-1 GENERAL OUTLINE OF EACH ASSEMBLY

2-1-1 POSITION OF MAJOR ASSEMBLIES FITTED

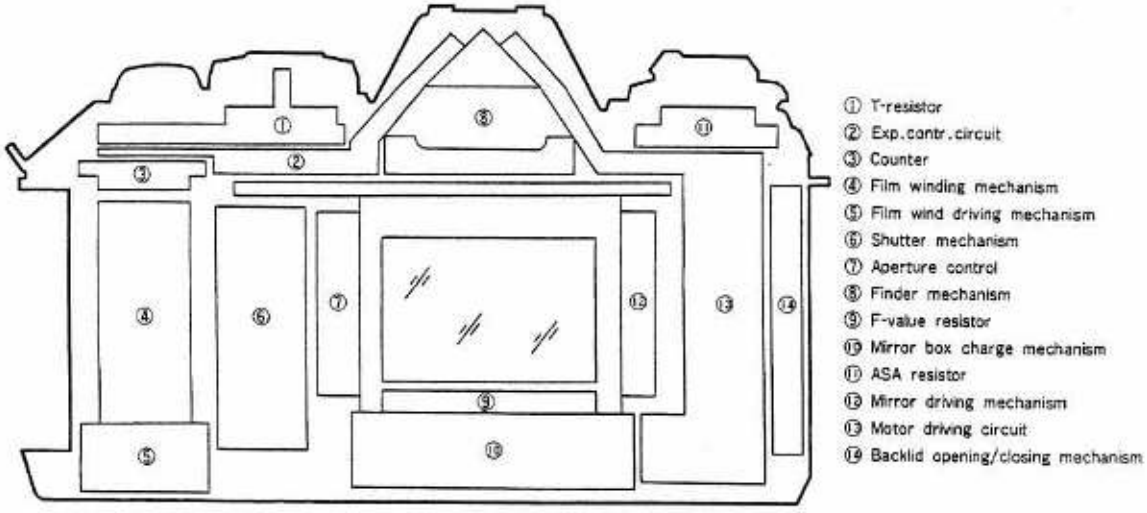

Fig.-1

2-1-2 BLOCK DIAPHRAGM OF MAJOR FUNCTIONAL SEQUENCES

[Operation Theory]

(1) Logarithm Conversion Circuit

Logarithmically converts into voltage the intensity of light intercepted by the light intake assembly.

(2) Analog Operation Circuit

Analogously operates ASA signal, signal on the F-stop value at the full lens opening, shutter speed signal and light intensity, as converted into voltage, to convert the correct F-stop value into voltage.

(3) 2-Channel Analog Switch

Transmits shutter speed signal and the analogously operated correct F-stop value to an A/D converter with a time lag.

(4) A/D Converter

Converts analogized information into digital signal.

(5) Central Processing Unit (CPU)

The FT-1 Motor's "brains" to exercise time control over all sequences.

(6) F Register

Memorized digitally converted signal on the correct F-stop value.

(7) T Register

Memorizes digitally converted signal on the shutter speed.

(8) F Senser

Converts diaphragm signal into voltage.

(9) F Counter

Converts into pulses the diaphragm signal which have been converted into voltage.

(10) Digital Comparator

Checks the number of pulses from the F register against that of pulses from the F counter to determine the correct F-stop value.

(11) Shutter Speed Control Circuit

Controls the shutter speed according to the number of pulses memorized by the T register.

(12) Motor Driving Circuit

Controls the operation of the film wind motor and the mirror box motor.

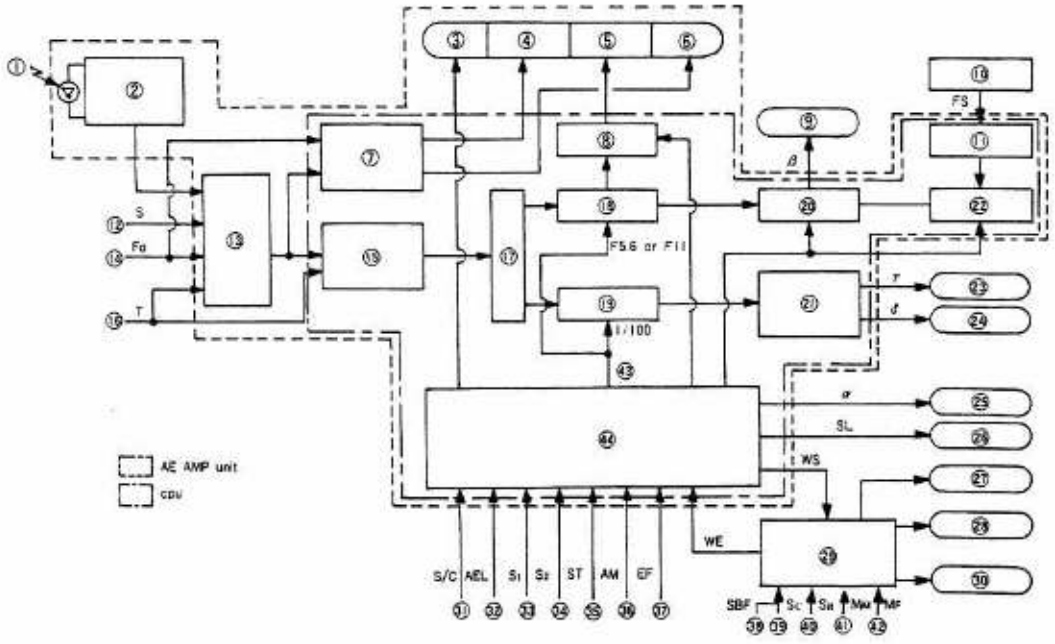

Fig. -2

① Light
② Logarithm conversion circuit
③ A-M display
④ Low brightness warning
⑤ F-display
⑥ High brightness warning
⑦ Comparator
⑧ F-display circuit
⑨ Diaphragm Mg
⑩ F-senser
⑪ Waveform shaping circuit
⑫ Film speed (ASA) data
⑬ Analog operation circuit
⑭ Open F-value data
⑮ 2-channel analog switch
⑯ Shutter speed data
⑰ A/D convertor
⑱ F-register
⑲ T-register
⑳ Digital comparator
㉑ Shutter speed control circuit
㉒ F-counter
㉓ Lead blade Mg
㉔ Rear blade Mg
㉕ Release Mg
㉖ Self LED
㉗ Film end indicator LED
㉘ Wind motor
㉙ Motor driving circuit
㉚ Mirror box motor
㉛ Single continue signal
㉜ AE Lock signal
㉝ Photo-metering SW signal
㉞ Release SW signal
㉟ Self-timer signal
㊱ Auto/man signal
㊲ Charge completed signal
㊳ Lock claw SW signal
㊴ Counter SW signal
㊵ Rewind SW signal
㊶ Mirror box motor SW signal
㊷ Wind motor SW signal
㊸ EF setting signal
㊹ C. P. U.

!-1-3 TIME CHART FOR OPERATION OF EACH UNIT

(1) Continue

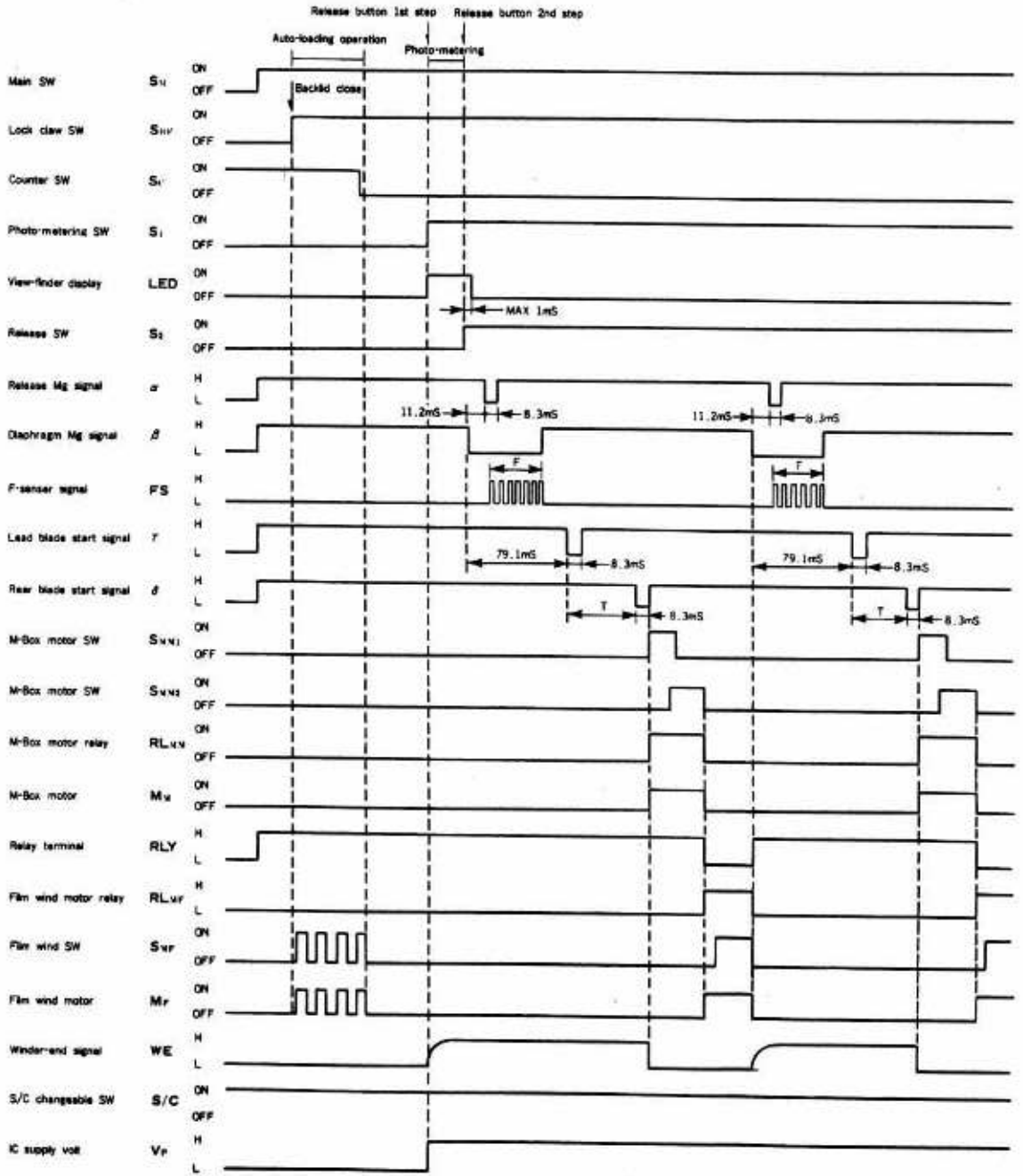

T : Shutter speed
F : Aperture control time

(1) SR is the switch which is turned on only when the film wind has not been completed at the last frame to complete the picture-taking operation.

(2) When there is no FS input, β is always turned off in synchronization with γ signal.

(3) The pulse width of γ is 8.3ms in case of T > 8.3ms and 8.3ms + T in case of T < 8.3ms.

(4) The time required for Vp to be turned off is more than 102ms from the turning-on of β and less than 102ms from the turning-off of WE.

(5) The time for LED to be turned on for another time is more than 102ms from the turning-on of β and less than 102ms from the turning-off of WE.

(2) S/C changeable <Single>···S/C knob OPEN

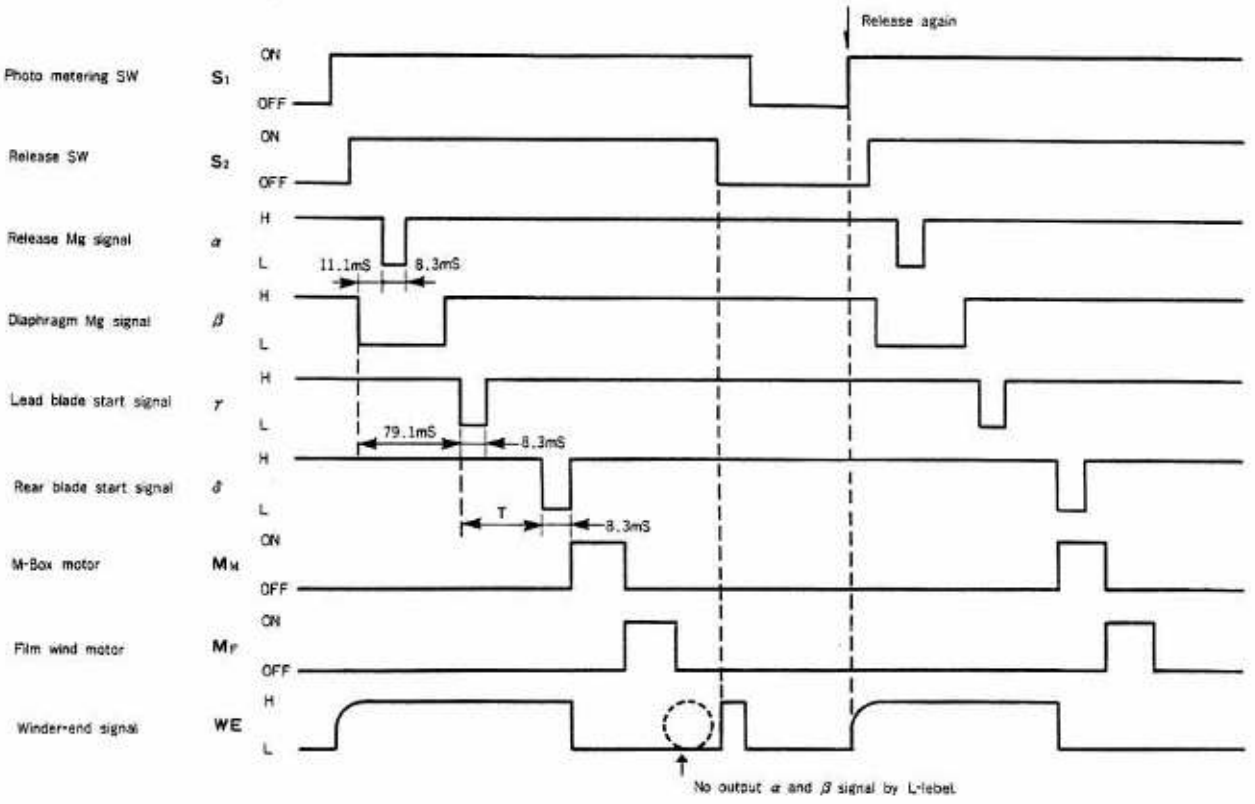

(3) S/C changeable <Continue>···S/C knob CLOSE (The finger separate from the release button, after two times continue)

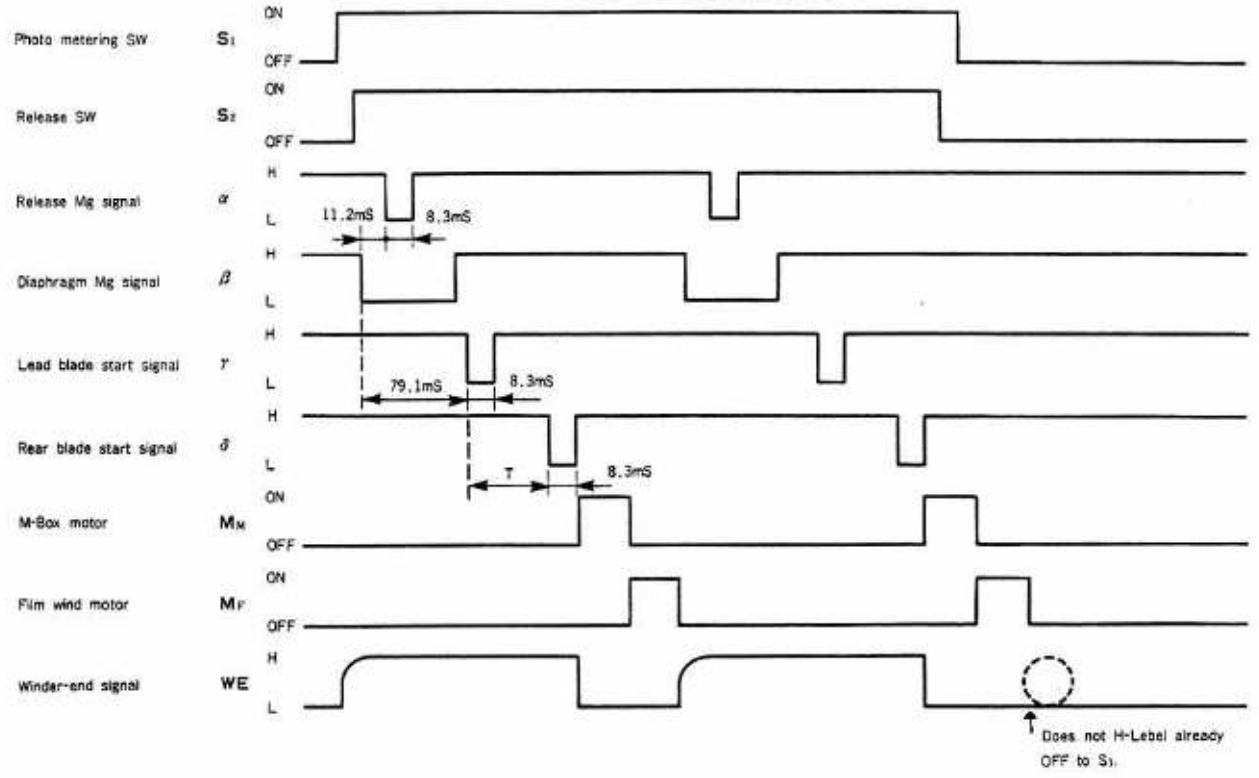

(4) Detection of tensity with stretched of film

※The number in brackets indicates that of BA713's leg.

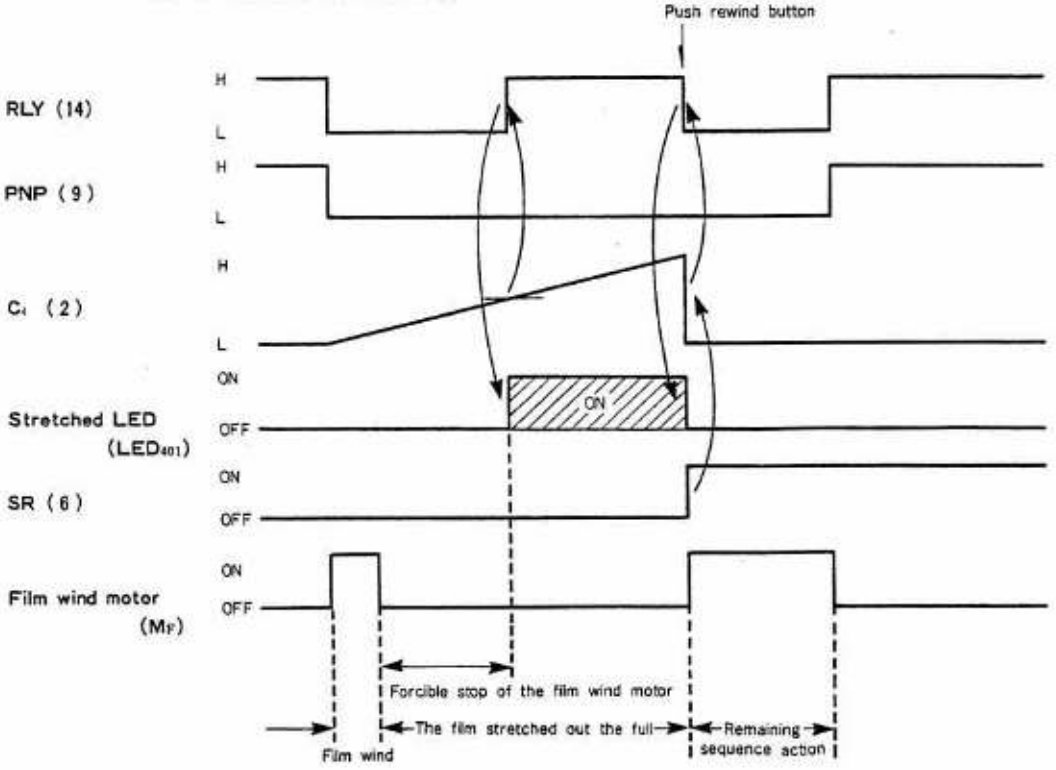

2-2 WIND MECHANISM

2-2-1 FILM WIND DRIVE MECHANISM

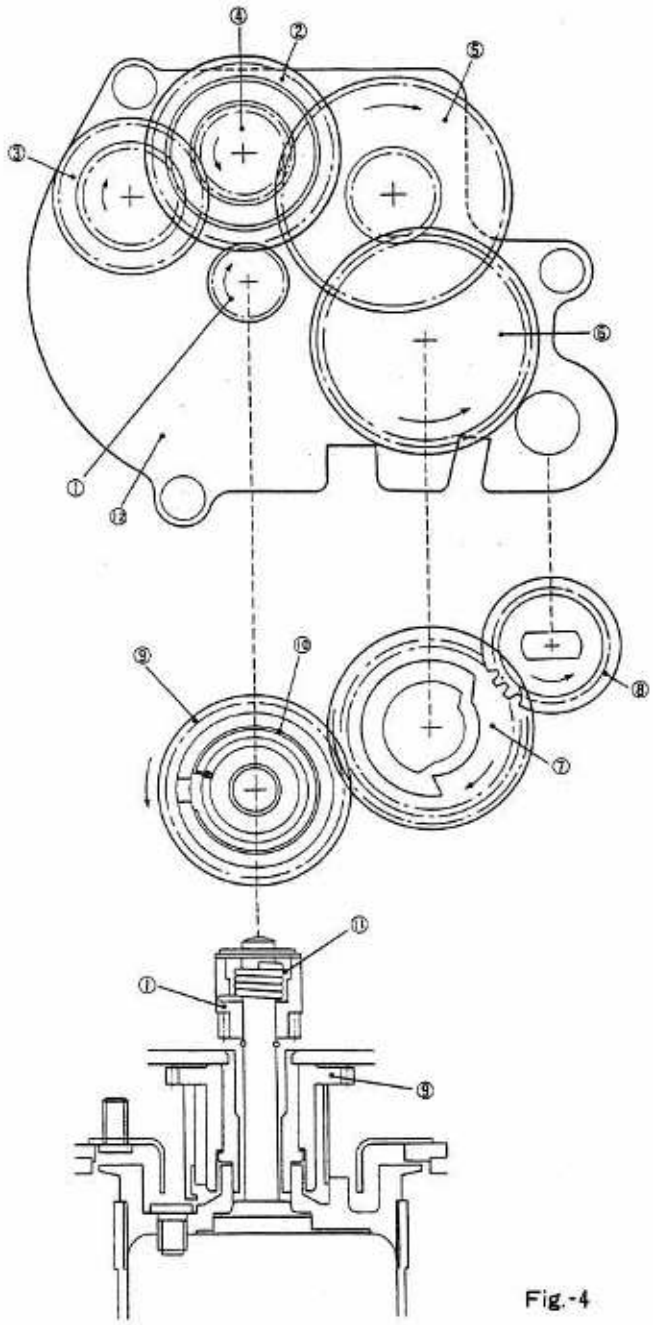

① Motor gear
② 1st gear
③ 2nd gear
④ 3rd gear
⑤ 4th gear
⑥ Driving gear
⑦ Cam gear
⑧ Sprocket gear
⑨ Spool gear
⑩ Spool friction spring
⑪ Motor slip spring
⑫ Wind gear base plate

Fig.-4

When the revolution of the motor is started by the motor drive circuit, the motor gear ① is turned in the direction marked by the arrow by the motor spring ⑪ which is fitted to the motor drive spindle, and the 1st gear ② which is in gear with the motor gear ① , 2nd gear ③ , 3rd gear ④ , 4th gear ⑤ , and driving gear ⑥ turn in the direction marked by the arrow. The driving gear ⑥ has a built-in reverse revolution prevention device and turns along with the cam gear ⑦ through the aid of the wind gear base plate ⑫ . The cam gear ⑦ is a dual-stage one; one stage turns the sprocket gear ⑧ and the other the spool gear ⑨ .

The spool friction spring ⑩ is fitted to the outside of the spool gear ⑨ , and the motor external tube is turned by the protrusion of the spool friction spring ⑩ .

By a sliding action, the spool friction spring ⑩ is designed that the difference between the degree to which the film is transported by the sprocket turned by the sprocket gear ⑧ and the take-up of the film which changes as the film is taken up on the motor external tube.
The motor slip spring ⑪ is so designed that when the film is stretched out to the full at the last frame, the motor is immediately disengaged from the series of gears to prevent the perforations to be snapped off at the last frame.

2-2-2 FILM WIND MECHANISM

When the leader tip of film ⑧ has been placed on the motor's external tube ① and the backlid closed, the switch will be automatically turned on to start the motor.

By action of the film wind drive mechanism, the motor's external tube ① turns and sprocket ③ starts transporting film ⑧ .
As the leader tip of film ⑧ keeps traveling along the motor's external tube ① in the gap between the motor's external tube ① and the camera body's film spool chamber, it will hit film guide roller plate ④ and will be guided into the direction in which it may easily wind itself around the motor's external tube ① .

By friction of spool rubber ② attached to the outer surface of the motor's external tube ① , film ⑧ is transported in the direction of the arrow, moving into the gap Ⓐ between the roller situated at the end of film guide roller plate ④ and the motor's external tube ① .

The film guide roller plate is pressed onto the motor's external tube ① at all times by the fixed force of a spring.
As it travels between them, film ⑧ sticks to spool rubber ② , eventually being taken up on the motor's external tube ① .
Once taken up, film ⑧ will be taken up without a hitch by dint of the friction power of spool rubber ② and the contact power of film guide roller plate ④ .

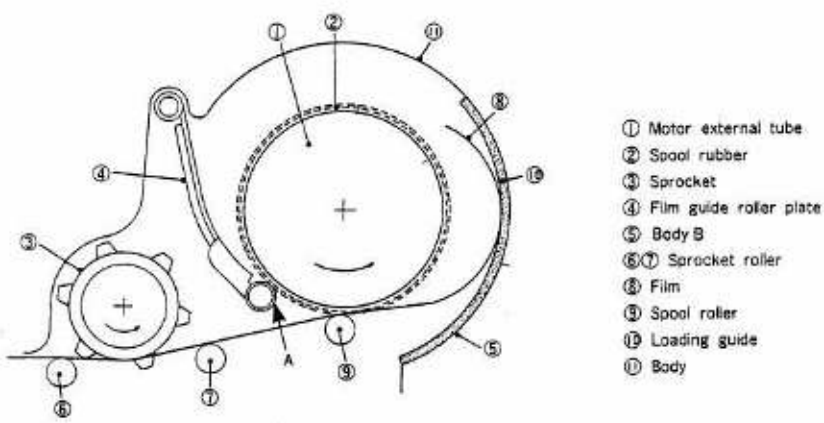

Fig. -5

2-2-3 FILM AUTO-LOADING MECHANISM

It has been a conventional practice to load a roll of film and cock the film wind lever till the film counter indicates "1". Now that the film wind mechanism has been automated, the film wind mechanism starts operating itself after a roll of film has been loaded and the backlid has been closed, and the film is automatically taken up until the film counter shows "1".

[Operation Sequence]

As the backlid has been closed after loading of a roll of film, the lock claw switch (SBF) which is coupled to the opening and closing of the backlid is turned on.

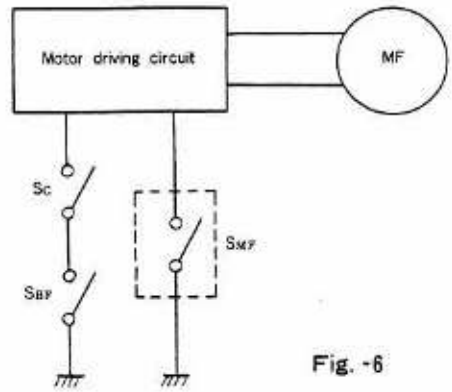

Fig. -6

With the simlutaneous operation of the counter switch (Sc), which is turned on in a situation where when the backlid has been opened, the film counter remains in its original position and indicates "S", an "ON" signal is transmitted to the motor driving circuit, turning the film wind drive mechanism's motor, taking up film and operating the film counter. Immediately before the film counter shows "1" after auto-loading of 4 frames, the film counter switch is turned off, transmitting an "OFF" signal to the motor driving circuit.

Upon receipt of "OFF" signal the motor driving circuit checks and sees whether the signal from the film wind switch (SMF) is "ON" or "OFF", and if the signal is "ON", it keeps turning the motor. When the signal is switched to "OFF", it cuts off the flow of electric current to the motor, putting an end to the auto-loading operation.

The film wind switch (SMF) is built in the wind gear baseplate subassembly and turned on and off each time one frame is taken up.

2-2-4 FILM TRANSPORT CHECK MECHANISM

Film transport may be checked by the revolution of the film advance indicator plate fitted to the backlid.

As the film advances, the sprocket roller A ① turns.
By dint of the turning of the film advancing indicator magnet A ② placed inside the sprocket roller A ① , the film advancing indicator magnet B ③ turns according to the principles of magnetism.

The revolution of the film advancing indicator magnet B ③ may be ascertained by the transport indicator plate pasted to the film advancing indicator magnet B ③ .

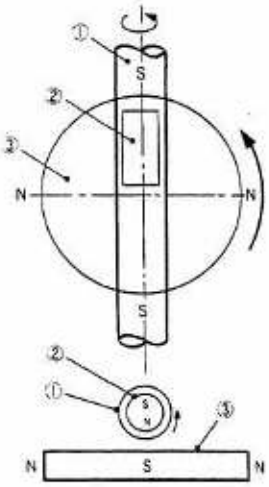

① Sprocket roller A
② Film advancing indicator magnet A
③ Film advancing indicator magnet B

Fig.-7

2-2-5 SHUTTER CHARGE MECHANISM

The shutter is set in a reciprocating system. Rotation of the motor built in mirror box's lower part is converted into reciprocation by a combination of a sector gear and a deficit gear to set the shutter.

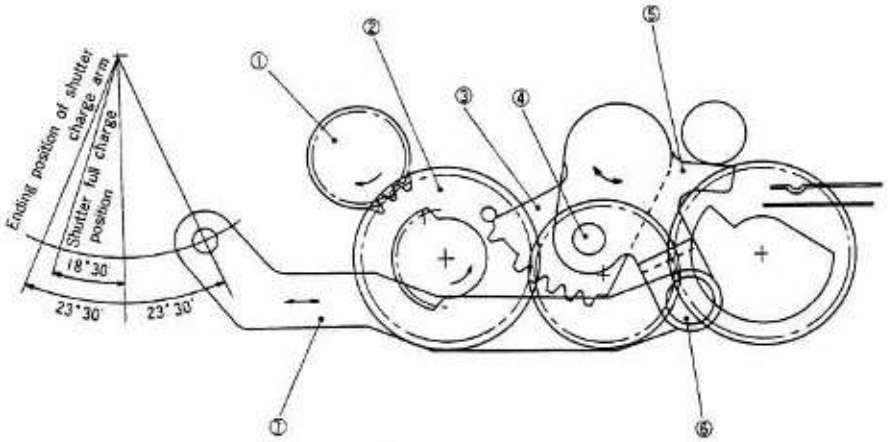

① Worm wheel shaft
② Shutter charge 2nd gear
③ Shutter charge gear
④ Shutter charge gear pin
⑤ Shutter charge lever
⑥ Shutter charge arm shaft
⑦ Shutter charge arm

Fig.-8

Shutter charge 2nd gear ② has a pair of cogwheels. The spur gear section engages with worm wheel shaft ① , whereas the deficit gear section engages with shutter charge gear ③ . Shutter charge lever ⑤ whose position is controlled by shutter charge gear pin ④ is integratedly fitted to shutter charge gear ③ .

Shutter charge arm ⑦ for the setting of the shutter is fitted to the tip of shutter charge lever ⑤ so that it may be turned by shutter charge arm shaft ⑥ . The other end of shutter charge arm ⑦ is fitted to the shutter set lever in manner to facilitate its rotation.

When the motor built in the lower section of the mirror box starts turning in response to signal about shutter's rear plane, worm wheel shaft ① whose speed is reduced by a worm and a worm wheel turns clockwise (in the direction of the arrow). Turning of the worm wheel shaft ① leads to that of the shutter charge 2nd gear ② .

As shutter charge 2nd gear ② keeps turning, the deficit gear section of shutter charge 2nd gear ② engages with shutter charge gear ③ , and the shutter is set by shutter charge arm ⑦ .

Simultaneously with setting of the shutter, the deficit gear section of shutter charge 2nd gear ② comes out of gear with shutter charge gear ③ , and shutter charge arm ⑦ returns to its original position by dint of the shutter set lever's righting moment. Shutter charge 2nd gear ② turns and stops.

2-2-6 REVERSE PREVENTION MECHANISM

This mechanism is exactly the same in structure as that of Autoreflex TC. No sound is generated during its operation. In its reverse rotation, there is no play in an optional position, theoretically,and this mechanism may come to a stop without backlash whatever.

When film is being wound, driving gear ① integratedly turns with cratch ② . Roller ④ slides and turns in idle gear shaft ③ with the aid of clutch ② and roller spring ⑤ . As idle gear shaft ③ is fixed to the wind gear base plate, roller ④ serves as a "wedge" in the gap between clutch ② and idle gear shaft ③ , preventing reverse rotation of driving gear ① .

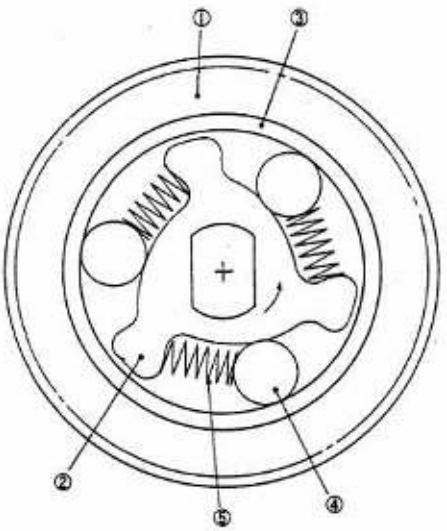

① Driving gear
② Clutch
③ Idle gear shaft
④ Roller
⑤ Roller spring

Fig.-9

2-3 COUNTER MECHANISM

FT-1 MOTOR'S film counter shows the number of frames exposed, as it is driven by a train of gears coupled to a sprocket.

When backlid ⑥ has been closed, one end of counter lever spring ⑤ , which turns around the bearing of counter gear ① , is pushed onto a protrusion of backlid ⑥ .

Counter lever spring ⑤ is fitted with counter transmitting gear ② , which has a protrusion with V-shaped grooves in some parts of its external circumference. When counter lever spring ⑤ is pushed in by backlid ⑥ , counter transmitting gear ② remains in gear with counter gear ① and the ratchet section of counter drum ③ rubs against the protrusion of counter transmitting gear ② .

The counter drum has been separated into two parts, the counter drum ③ and the counter drum B ④ . This arrengment is designed to enable adjustment of the scale position, and also to protect the scale plate from damage.

As the sprocket has started turning, counter gear ① coupled to the sprocket turns, so does counter transmitting gear ② .
As counter transmitting gear ② has stopped after a run, the V-shaped groove of the protrusion comes in gear with the ratchet tooth of counter drum ③ , turning counter drum ③ by one pitch.

One pitch of the ratchet of counter drum ③ corresponds to the gap between numerals, or film frame numbers, engraved on the external circumference of counter drum B ④ , so that it is possible to know the number of frames each time the ratchet is advanced by one pitch.

When backlid ⑥ has been opened, counter lever spring ⑤ disengages with backlid ⑥ , so does disengages counter transmitting gear ② with counter drum ③ restoration to counter drum ③ is original position.

In Fig. 10, the power is turned on while the film counter remains set to "S" and counter switch ⑦ is in contact with earth pin ⑧ .
When the backlid has been closed and film auto-loading completed (with the film counter plate turning in the direction of the arrow), the counter switch ⑦ falls into the film counter's A section and the power is turned off.

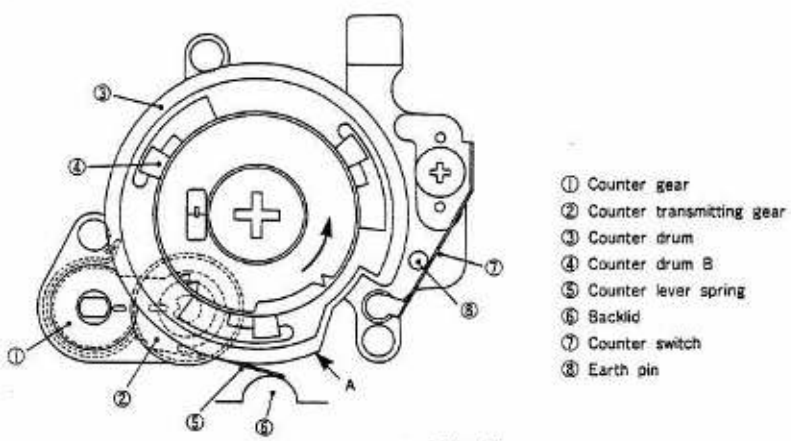

Fig.-10

2-4 RELEASE MECHANISM

For the release of the shutter, an two-step electric switch is provided as is the case with the FS-1.

When the release button is depressed, the first-step switch (S1) is turned on. Here the exposure control circuit is switched on and picture-taking data are indicated in the finder (see "2-8 Finder").

With a further depression of the release button, the second-step switch (S2) is turned on, giving rise to a picture-taking action.

When S1 is kept depressed, light metering is carried on, and when it is switched off, all indications are disappear.

When the shutter button is depressed (with S1 and S2 switched on) with the S/C switch brought in line with (S), your camera is set to the single-frame shooting mode. When the shutter button is depressed (with S1 and S2 switched on) with the S/C switch aligned with (C), your camera is set to the continuous shooting mode.

2-4-1 POSITION OF RELEASE

When the release button is pressed 0.7mm down from the initial position, the switch is turned on in the first step (S1) displaying information in the viewfinder.

Another 0.4mm depression makes the switch turned on in the second step (S2), releasing the shutter.

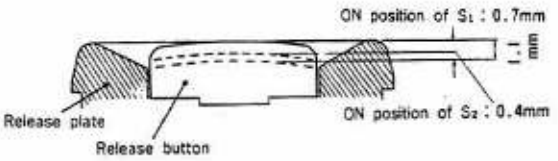

Fig.-11

2-4-2 OPERATION AFTER RELEASE

After the release button has been depressed the following sequence takes place.

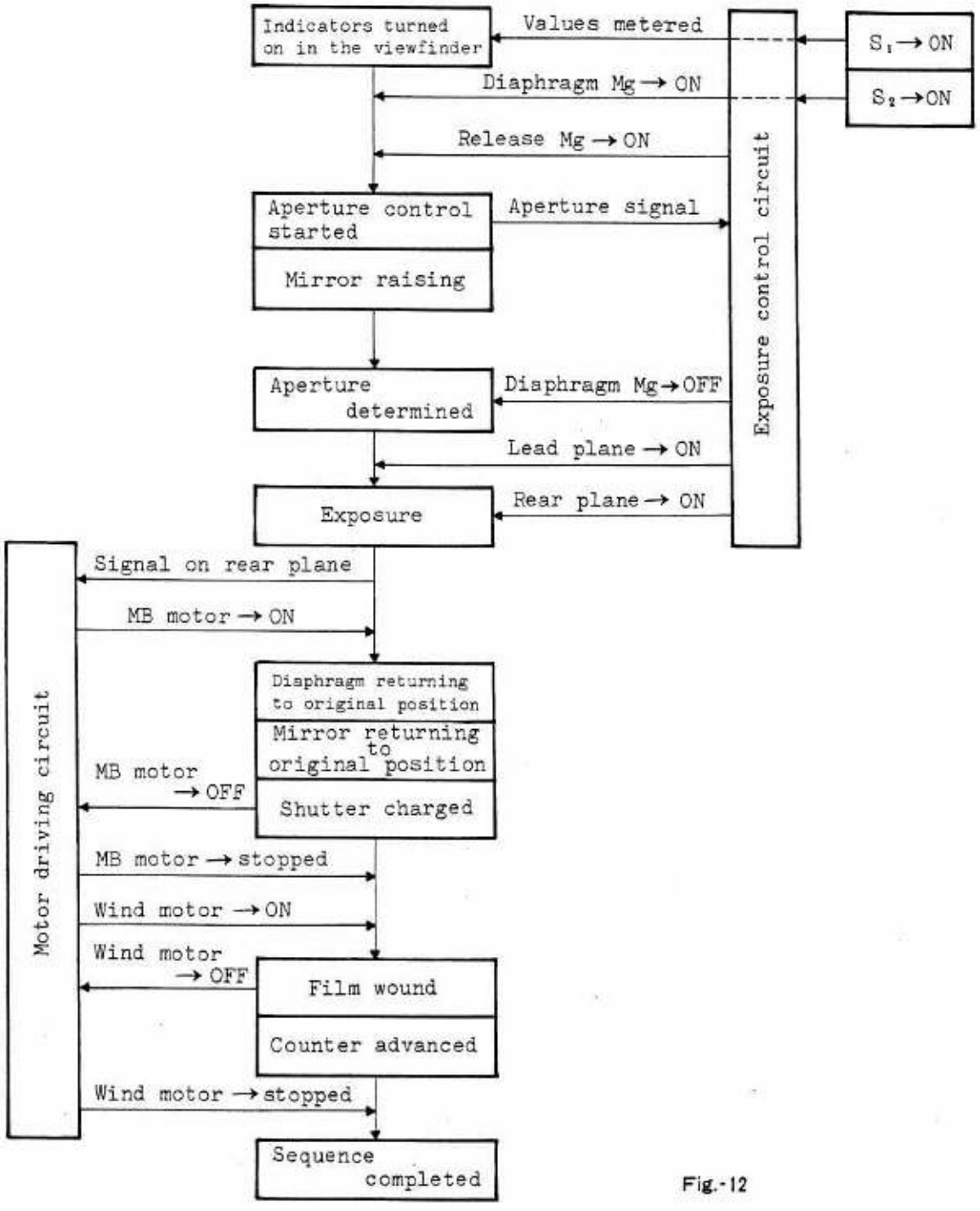

Fig.-12

2-4-3 S/C CHANING, AEL MECHANISM

An S/C (single-frame and continuous shooting) switch button and an AEL (AE lock) is provided to the upper part of the FT-1 motor.

(1) S/C Change

When the S/C changing button ① is brought in line with [S], the S/C changing plate ② fitted on the T resistor is detached from the S/C changing earth pin ③ , setting your camera to the single-frame shooting mode. Here, even if the release button is continuously depressed, only one cycle of actions is made. When the S/C changing button ① is locked in alignment with [C] , the S/C changing plate ② comes in contact with the S/C changing earth pin ③ , grounding the S/C signal and setting your camera to the continuous shooting mode. In this mode, keep the release button depressed, and pictures will be continuously be taken one after another.

(2) AE Lock Mechanism

The AE lock mechanism is so designed that when the release button S1 (the first step of the release button) is turned on after the main switch knob ⑤ is moved to the AEL position while depressing the AEL stopper ④ , light metering will be done and at the same time the LED in the field of view will be kept in the metered condition.
Even if your camera is moved around to change the brightness of light coming into the camera in this situation, there will be no change in the initially metered brightness. If you want to change the LED to a different one in the field of view, release the switch button S1, change the brightness for metering and then depress S1, and the AE may be locked in an optional.

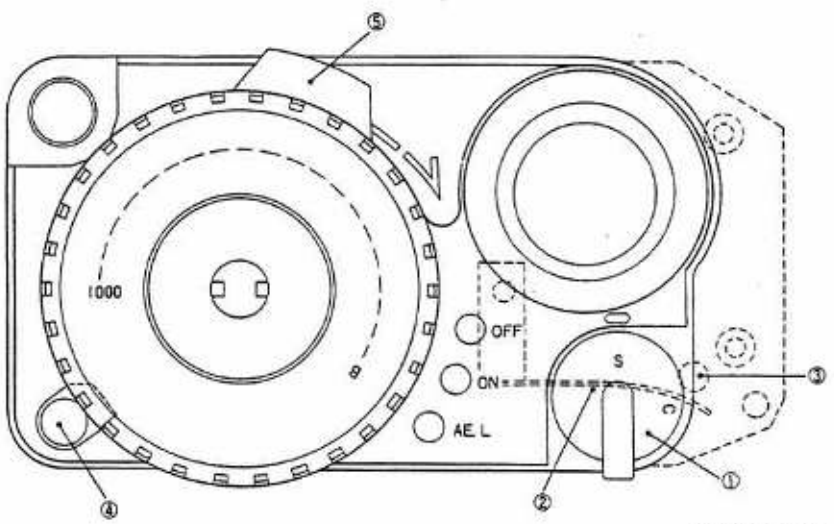

Fig.-13

① S/C chaning button
② S/C chaning plate
③ S/C chaning earth pin
④ AEL stoper
⑤ Main switch knob

2-5 MIRROR BOX

2-5-1 FEATURES

(1) Instead of a spring, a micro-motor is used to drive the mirror box mechanism and the automatic aperture and other mechanisms are abolished for a structural simplification and a higher credibility.

(2) Functionally, each unit is independent to facilitate adjustment.

(3) As the shutter is fitted behind the mirror box, adjustment up to an exposure adjustment are feasible with the mirror box.

(4) Closure of the diaphragm ring is controlled electronically by the use of a pulse converted, as in the FS-1

(5) The F-stop value at the full opening of the mounted lens is introduced with voltage by using an electric resistor.

2-5-2 DIAPHRAGM CONTROL MECHANISM

The diaphragm ring is revolved with the tension of a spring in the direction in which the lens is stopped down, the runs of the diaphragm ring are photo-electrically converted into pulses by a diaphragm detecting mechanism, and the diaphragm magnet is turned off to stop the diaphragm ring and determines the correct aperture when the number of pulses agrees with that which has been set in advance by the exposure control circuit.

(1) In response to a release signal, the release magnet is turned ON and diaphragm ring ① turns in the direction of aperture closing, when diaphragm detecting gear ② , F-senser gear ③ and stop claw gear ③ turn at an increasing speed in the direction of the arrow in synchronization with diaphragm ring ① .

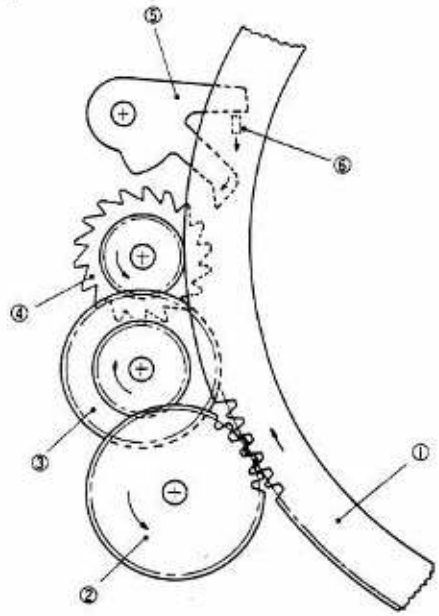

① Diaphragm ring
② Diaphragm detecting gear
③ F-senser gear
④ Stop claw gear
⑤ Stop claw
⑥ Diaphragm magnet lever

Fig.-14

(2) Turning of F-senser gear ③ leads to operation of the diaphragm detecting mechanism. The runs of diaphragm ring ① are converted into pulses and inputted into the exposure control circuit by the diaphragm detecting mechanism.

(3) In the exposure control circuit, the data on the rotation of diaphragm ring ① are checked against the data metered and memorized at the time of a release and a signal is emitted to turn off the diaphragm magnet when both data agree with each other.

(4) When the diaphragm magnet is turned off in response to a signal from the exposure control circuit, diaphragm magnet lever ⑥ which has stopped stop claw ⑤ moves in the direction of the arrow. In conjunction of this movement, stop claw ⑤ moves in the direction of the arrow to stop claw gear ④ .

(5) As stop claw gear ④ stops, diaphragm ring ① also stops to determine an aperture.

(6) In this manner, high-precision control may be assured by controlling diaphragm ring ① in the position of stop claw gear ④ the speed of which is accelerated.

2-5-3 DIAPHRAGM DETECTING MECHANISM

This mechanism photo-electrically converts the runs of the diaphragm ring into pulses.

(1) Two siemenssters ③ and ④ are placed between LED ① and photo transistor ② , which face each other.

(2) One is F-senser Siemensster B ③ which is fitted to F-senser gear shaft bearing metal ⑤ , and the other is F-senser Siemensster A ④ which fitted to F-senser gear shaft ⑥ with Siemensster set screw ⑦ which turns in synchronization with F-senser gear ⑧ .

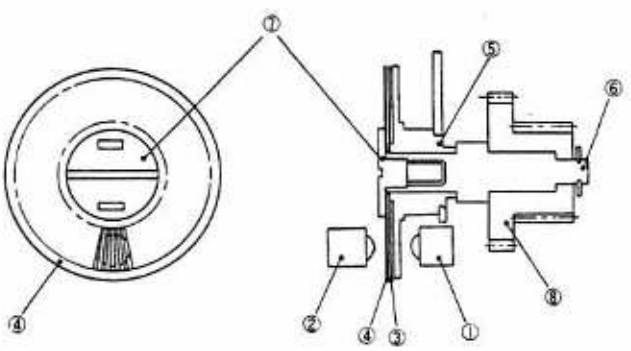

① LED
② Photo transistor
③ F-senser siemensster B
④ F-senser siemensster A
⑤ F-senser gear shaft bearing metal
⑥ F-senser gear shaft
⑦ Siemersster set screw
⑧ F-senser gear

Fig.-15

(3) The light emitted from LED ① by fixed F-senser Siemensster B ③ and revolving F-senser Siemensster A ④ is intermittently intercepted by photo transitor ② , so that the output of photo transistor ② is converted into intermittent pulses.

(4) The pulses are added by the exposure control circuit. When the number of pulses agrees with that which has been set in advance by the exposure control circuit, the diaphragm magnet is turned off.

2-5-4 DIAPHRAGM RESTORING MECHANISM

This mechanism is so designed that the diaphragm ring which has stopped in an arbitrary position, depending on the aperture value, is returned to the initial position (Fo) by a motor which is installed in the lower part of the mirror box.

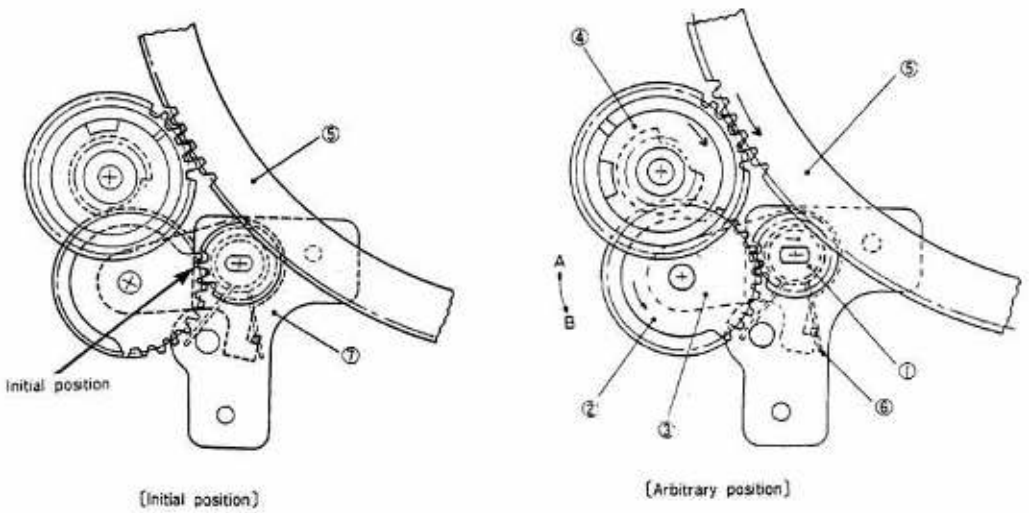

Fig.-16

① Diaphragm ring driving small gear
② Diaphragm ring driving gear
③ Driving gear lever
④ Diaphragm detecting gear
⑤ Diaphragm ring
⑥ Driving gear lever spring
⑦ Diaphragm ring driving gear base plate

Diaphragm ring driving gear ② engages with diaphragm ring driving small gear ① and is fitted to driving gear lever ③ which may turn around the bearing of diaphragm ring driving small gear ① .

(1) When diaphragm ring ⑤ has returned to the initial position, its engagement with diaphragm detecting gear ④ is released by the dificit section of diaphragm ring driving gear ② .

(2) This release is designed to allow the reciprocation of diaphragm ring ⑤ and remove an unnecessary load when it turns in the direction in which the aperture closing.

(3) When diaphragm ring ⑤ has stopped in an arbitrary position, diaphragm detecting gear ④ which engages with the diaphragm ring also arbitrarily turns and stops.

(4) When the mirror box motor installed in the mirror box's lower part starts turning in response to signal on the rear plane, diaphragm ring driving small gear ① and diaphragm ring driving gear ② turn in the direction of the arrow as their speed is reduced by a worm and its worm wheel.

(5) As diaphragm detecting gear ④ has stopped in an arbitrary position, there are cases in which diaphragm ring driving gear ② and diaphragm detecting gear ④ do not smoothly engage with each other.

(6) Here, diaphragm ring driving gear ② and driving gear lever ③ run away in the direction of arrow B for a moment but is returned in the direction of arrow A by driving gear lever spring ⑥ .

(7) From this moment, diaphragm detecting gear ④ is turned in the direction of the arrow to return the diaphragm ring to its original position.

2-5-5 MIRROR DRIVING MECHANISM

[Mirror raising]

(1) With the release magnet turned on, hook lever ⑧ is turned in the direction of arrow A to release its engagement with mirror driving gear ② .

(2) As its engagement has been released, mirror driving gear ② is turned in the direction of arrow B by the tension of mirror up spring ⑤ , and mirror frame supporting plate ⑨ is lifted up by mirror driving shaft ④ which is calked by mirror driving gear ② .

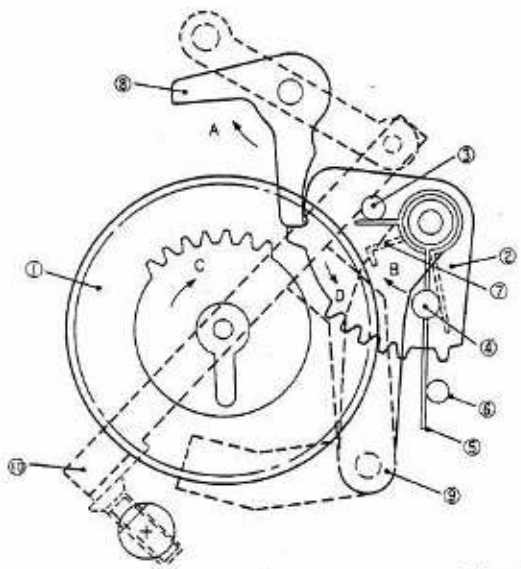

Fig.-17

[Returning]

(1) When the mirror box motor placed in the lower part of the mirror box turns in response to a signal on the shutter's rear plane, mirror driving 5th gear ① turns at a reduced speed in the direction of arrow C, and the toothed section of mirror driving 5th gear ① engages with mirror driving gear ② to turn mirror driving gear ② in the direction of arrow D.

(2) In conjunction with the turning of mirror driving gear ②, the mirror lifting power of mirror up spring ⑤ one end of which engages with mirror up spring stud B ⑥ is charged by mirror up spring stud A ③ which is calked by mirror driving gear ②. Simultaneously with this action, mirror ⑩ is returned to the original position by mirror fixed spring ⑦ which is hooked on mirror frame supporting plate ⑨ and mirror driving shaft ④.

2-6 BACKLID OPENING AND CLOSING MECHANISM

With the backlid lock button fitted to the center, instead of the lower part, the opening and closing the backlid has been facilitated. Information about the opening or closing of the backlid is electrically transmitted to the motor drive circuit with a switch in the same manner as in the case of the FS-1.

[Opening]

(1) Pull the lock claw ① downward, and the lock claw pin ② will be disengaged to open the backlid.

(2) Simultaneously with the opening of the backlid, the lock claw stopper ③ will turn in the direction shown by the arrow B and fall into the slit A of the lock claw ①. The lock claw ① is prevented by the lock claw spring ④ from returning to the original position.

(3) The lock claw switch ⑤ is coupled to the lock claw ①, so that the switch is off when the backlid is open.

[Closing]

(1) Lock claw stopper ③ which has prevented lock claw ② from returning to the original position is disengaged with the depressed section A as lock claw stopper ① is turned in the direction of arrow C by the closing of the backlid. By this action, lock claw ② is returned to the original position.

(2) Simultaneously with the returning of lock claw ② to the original position, lock claw ② engages with the opening/closing claw ① of the backlid to close and lock claw switch ⑤ is turned on.

(3) With lock claw switch ⑤ is turned on, "auto-loading" starts.

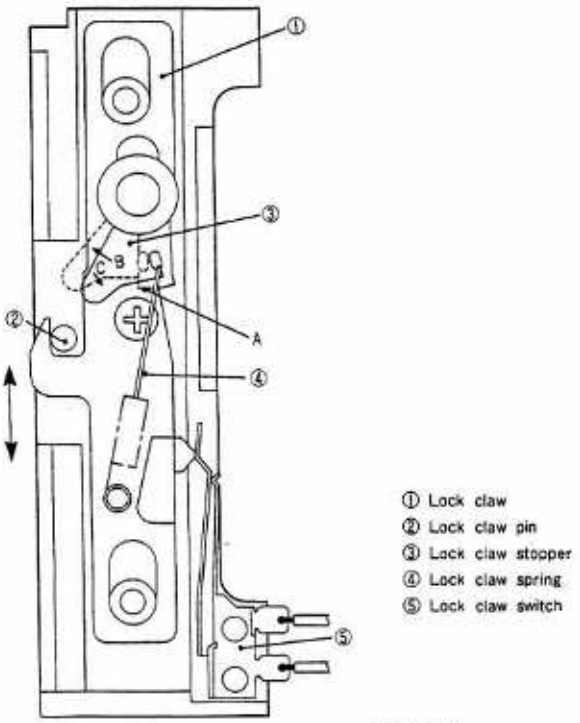

Fig.-18

2-7 BATTERY CASE

Cartridge type [loaded with four LR03 alkalimanganese dry cells in series.] (1.5V x 4 6V)

When mounted on the camera's body, the battery case serves as the handgrip. .....Optional battery case LR6 type

The camera was equipped with a battery case for LR03 dry cells when it was shipped out.

2-7-1 MOUNTING OF BATTERY CASE TO CAMERA BODY

(1) Load four LR-03 batteries according to the label.

(2) Hook the "claw" of the "+" contact side of the battery case on the "battery case holder" and turn it so that it comes in close contact with the right-hand side of the camera body.

2-7-2 DISMOUNTING OF BATTERY CASE FROM CAMERA BODY

While the battery case button is kept depressed, press down the battery case lock claw knob and while turning the battery case in front of the body, detach it.

2-7-3 BATTERIES USED

Japan: LR-03 or LR-6

Elsewhere in the world: Mallory Mn 2400 or Mn 1500

2-8 VIEW FINDER MECHANISM

The optical system is entirely housed in penta-prism frame ① , and fresnel lens ④ , finder frame ⑤ and penta-prism are built in the frame in the order given. In resin penta-prism carrier ③ , aperture scale plate ⑥ for indication in the viewfinder and light guide ⑦ are built.

The upper surface of fresnel lens ④ serves as the focusing plane, and a split image is provided at the center to facilitate focusing and a micre-diaprism is placed around the center.

A condenser lens, available for the conventional cameras, is not adopted to reduce the height of the camera. The finder magnification at the center is standing at 0.81X with a 50mm F1.8 lens.

The reflecting plane of penta-prism ② is coated with evaporated silver to brighten the viewfinder.

The indicators in the viewfinder are digital, and red LEDs are placed along the left-hand side of aperture scale plate ⑥ .

The display method is as follows

* Automatic mode..... LED either at one of the readings from F1.4 to F22 is turned on.
* Manual mode..... LED at M flickers. LED either at one of the readings from F1.4 to F22 is turned on.
* High-intensity warning..... LED flickers at F22.
* Low-intensity warning..... LED at F1.0 (intermediate point between M and F1.4) flickers.
* Voltage drop warning..... LEDs at F1.0 and F22 alternately flicker.
* Picture-taking with dedi-... cated electronic flash LED flickers at F5.6 or F11 at electronic flash's full charge.
* Stopped-down metering..... LED at F1.0 is turned on.

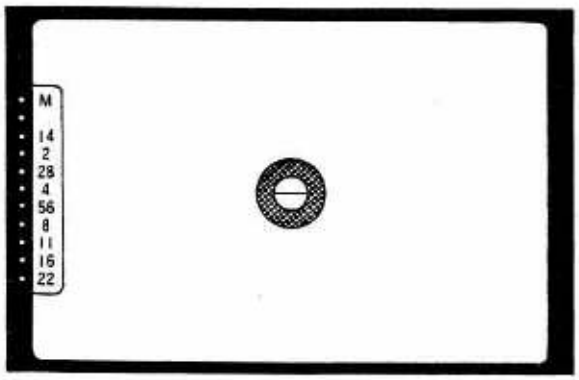

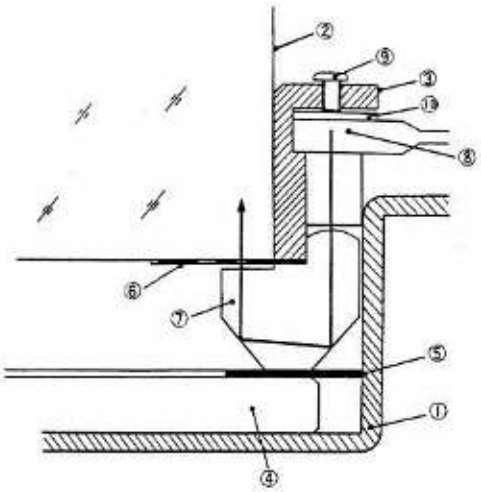

① Penta-prism frame
② Penta-prism
③ Penta-prism carrier
④ Fresnel lens
⑤ Finder frame
⑥ Aperature scale plate
⑦ Light guide
⑧ LED
⑨ LED setscrew
⑩ LED spacer

Fig.-19

2-9 SELF-TIMER

The self timer is electrically set with a depression of self timer start button.

The self timer, which has been set, will be released after red LED in self timer window flickers for about 10 seconds.

Red LED flickers in three different cycles as shown in Fig. 20. With the flickering quickens, the photographer may come to realize how soon the self timer is released.

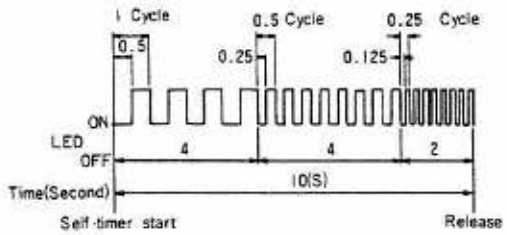

Fig.-20

2-10 HOT SHOE

The hot shoe is provided with a device to prevent an electric shock. Even if the hot shoe is touched as it is left intact, there will be no electric shock.

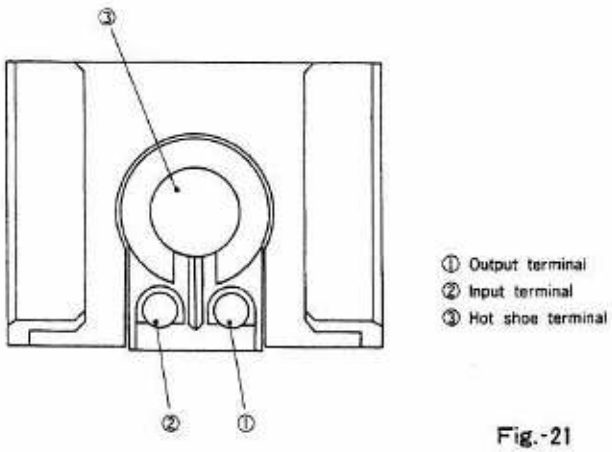

Fig.-21

When a dedicated electronic flash is mounted on the hot shoe, the pin goes down, making the switch conductive. The hot shoe is so designed that its circuit is activated only when the pin has gone done.

This hot shoe is with two terminals for the inputting of signal into the dedicated electronic flash and its outputting.

Output terminal ① feeds ASA signal from the camera body to the dedicated electronic flash.

Input terminal ② feeds from the dedicated electronic flash to the camera body signal a full charge of the batteries, signal the aperture (F5.6 to F11) and signal the shutter speed (1/100 sec).

When a picture has been taken without feeding from the dedicated electronic flash to the camera body signal a full charge, it means that the picture has been taken in the AE mode.

Terminal ③ is the hot shoe contact point.

2-11 REMOTE CONTROL SOCKET

The remote control socket equipped to the front of the camera's body has five input and output terminals.

The input terminals includes S1, S2 and ST, Fout is an output terminal and the last one is a common G (ground) terminal. The function of each terminal is as follows:

S1 ..... Terminal for the inputting of signal about the release of the shutter in the 1st step. When signal the turning-on of the switch have been fed, metering starts.

S2 ..... Release 2nd switch signal input terminal which causes photo-taking to be initiated upon input of ON signal following an input of ON signal to the S1.

ST ..... Self timer operation input terminal. When ON signal is input and the ON data of S1, S2 are input to there terminals, in this case self timer dosen't start. When OFF signal is input normally the self timer starts to operate.

Fout ..... Terminal for the outputting of signal the correct aperture value in the AE mode. Aperture values are expressed in terms of voltage.

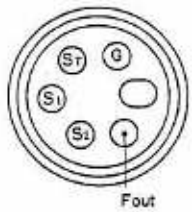

Fig.-22

2-12 TTL-AE MECHANISM

Basically, this system is the same as that of the FS-1, but the major difference is that the T-ASA resistor is detached.

2-12-1 INDICATIONS IN THE VIEW FINDER

This camera's AE mechanism uses gallium, arsenide and phosphide as its compound photocell ① . The photocell is put into the shutter speed-priority automatic exposure mechanism which is installed above the ejecting surface of penta-prism ② and with which TTL metering is done at the full lens opening.

Set the shutter dial ③ and the ASA dial ⑥ to the desired shutter and ASA film speeds, respectively, and the shutter speed will be determined by the T-resistor ④ coupled to the shutter dial ③ , and the ASA speed will be determined by the ASA resistor ⑤ coupled to the ASA dial ⑥ .

Release button ⑦ is pressed down in two steps. When the button is depressed first step, metering starts. When it is depressed further down into the second step, the shutter is released.

With the depression of release button ⑦ in the first step, exposure control circuit ⑧ becomes conductive and metering starts.

Signal light metered by photocell ① and signal the shutter speed are converted into voltage and inputted into exposure control circuit ⑧ . Exposure control circuit ⑧ operates and checks the inputted signal and determines the correct aperture value.

The correct aperture value is indicated with an illumination of LED ⑨ and the light of LED ⑨ is conducted into the finder by light guide ⑩ .

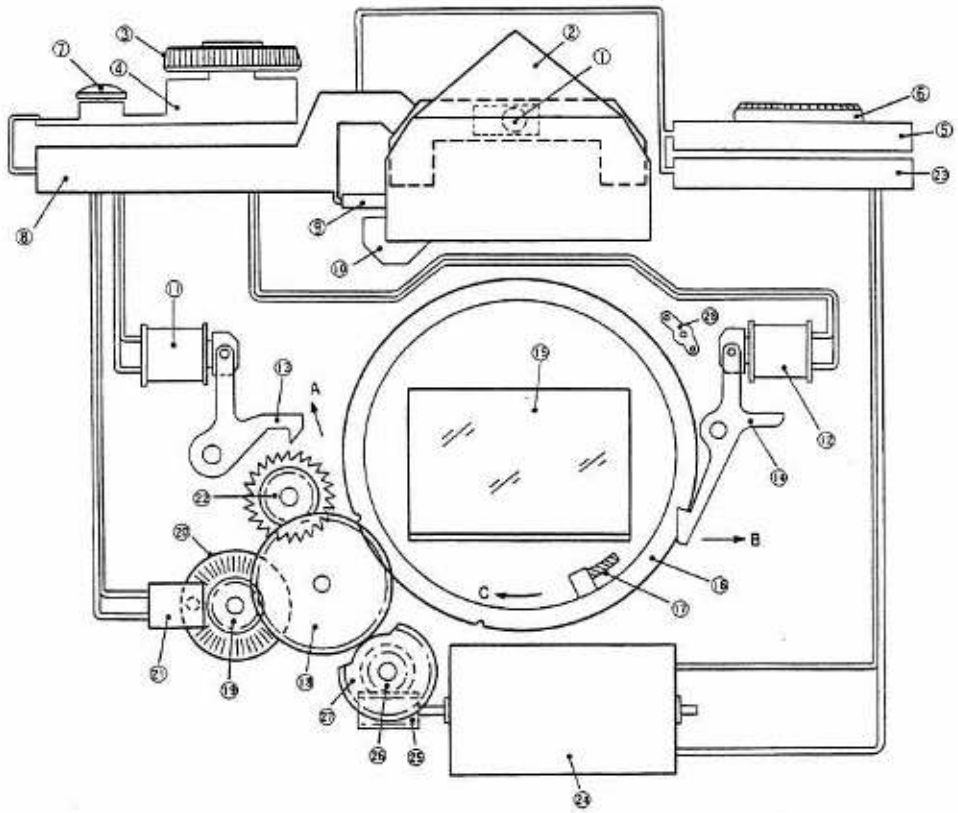

Fig.-23

① Photocell
② Penta-prism
③ Shutter dial
④ T-resistor
⑤ ASA-resistor
⑥ ASA dial
⑦ Release button
⑧ Exp. cotr. circuit
⑨ LED
⑩ Light guide
⑪ Diaphragm magnet
⑫ Release magnet
⑬ Stop claw
⑭ Hook lever
⑮ Mirror
⑯ Diaphragm ring
⑰ Camera body linking lever
⑱ Diaphragm detecting gear
⑲ F-senser gear
⑳ F-senser siemensster
㉑ Photo coupler
㉒ Stop claw gear
㉓ Motor driving circuit
㉔ Mirror box motor
㉕ Worm
㉖ Worm wheel
㉗ Diaphragm ring driving gear
㉘ Auto-manual chage-over lever

2-12-2 PICTURE-TAKING IN AE MODE

In the AE mode, depress release button ⑦ first step and check and see which one of the LEDs at F1.4 to F22 is turned on.

Flickering halfway between M and F1.4 represents a low-intensity warning, whereas flickering at F22 represents a high-intensity warning. In such situation, there is a need to change the shutter speed until LED is turned at some point indicative of the correct aperture between F1.4 to F22. As release button ⑦ is depressed further down into the second step after the correct aperture value has been ascertained, diaphragm magnet ⑪ and release magnet ⑫ are instantly made conductive by exposure control circuit ⑧ . Disphragm magnet ⑪ attracts stop claw ⑬ in the direction of arrow A, whereas release magnet ⑫ releases the attraction of hook lever ⑭ , which in turn moves in the direction of arrow B by the force of a spring. Hook lever ⑭ flips up mirror ⑮ and releases the engagement of diaphragm ring ⑯ . Pushed by the lens barrel's camera body linking lever ⑰ , diaphragm ring ⑯ starts turning in the direction of arrow C. Turning of diaphragm ring ⑯ is transmitted to diaphragm detecting gear ⑱ and at a faster speed, further onto F-senser gear ⑲ . F-senser Siemenssters ⑳ come in a pair and are situated between two parts which face each other -- LED and photo coupler ㉑ which is made by a photo-transistor. One Siemensster is fixed whereas the other turns as it is fitted to F-senser gear ⑲ .
As F-senser Siemenssters ⑳ are equipped with many slits, the LED of photo coupler ㉑ is intermittently intercepted by the photo-transistor due to the turning of F-senser Siemenssters ⑳ thus turning the output signal from photo coupler ㉑ into pulses. The number of pulses, or electric signals into which the number of runs of diaphragm ring ⑯ converted, is counted by exposure control circuit ⑧ , and the flow of power to diaphragm magnet ⑪ is cut off when the number agrees with the correct aperture value. The moment the conduction of diaphragm magnet ⑪ has been disconnect, the attraction of stop claw ⑬ is released to stop claw gear ㉒ . As stop claw gear ㉒ engages with diaphragm detecting gear ⑱ and diaphragm detecting gear ⑱ engages with diaphragm ring ⑯ , the diaphragm ring ⑯ stops when stop claw gear ㉒ is stopped. The lens barrel's camera body linking lever ⑰ also stops, determining the correct aperture.

Upon determination of the correct aperture, exposure control circuit ⑧ operates the shutter to expose the film.

Simultaneously with the film exposure, motor driving circuit ㉓ turn mirror box motor ㉔ in response to a signal on the shutter's rear plane, whereas diaphragm driving gear ㉗ which is coupled to worm ㉕ and worm wheel ㉖ turns counterclockwise.
As diaphragm driving gear ㉗ turns, diaphragm detecting gear ⑱ turns clockwise, revolving diaphragm ring ⑯ counterclockwise until initial position stopped by hook lever ⑭ .

Diaphragm driving gear ㉗ continues turning until it no longer prevents diaphragm detecting gear ⑱ from turning counterclockwise during the determination of an aperture, when mirror box motor ㉔ returns mirror ⑮ to the original position and completes a full shutter charge. Here, the operation of the AE mechanism comes to an end.

2-12-3 PICTURE-TAKING IN MANUAL MODE

In the manual mode, auto-manual change-over lever ㉘ converts signal the manual operation of the lens barrel into pulses and inputs them into the exposure control mechanism, so that exposure control circuit ⑧ is automatically set to the control system for pictue-taking in the manual mode.

The photographer turns the diaphragm ring of the lens barrel to determine the aperture first or turn shutter dial ③ to determine the shutter speed first.

Depress release button ⑦ one step, and ascertain the position where the LED indicator in the viewfinder is turned on.

The LED indicator between M and F1.4 serves as the index point for picture-taking in the manual mode. Turn the diaphragm ring of the lens barrel or the shutter dial ③ until LED ⑨ at that intermediate point is turned on.

When the LED indicator is turned on at the index point, depress release button ⑦ further down into the second step.

Simultaneously with the depression of release button ⑦ for the second step, diaphragm magnet ⑪ and release magnet ⑫ are made conductive with each other by exposure control circuit ⑧ , diaphragm magnet ⑪ attracts stop claw ⑬ , and release magnet ⑫ releases the attraction of hook lever ⑭ . Hook lever ⑭ flips up mirror ⑮ , whereas diaphragm ring ⑯ starts turning as it is depressed by the lens barrel's camera body linking lever ⑰ .

Here, even if camera body linking lever ⑰ is stopped by the lens barrel's diaphragm stopper, diaphragm ring ⑯ continues turning by itself within its turning capability.

As a certain length of time has lapsed after diaphragm ring ⑯ started turning, exposure control circuit ⑧ transmits a signal to the shutter to start its action. At the same time, it also cuts off the flow of power to diaphragm magnet ⑪ and stops diaphragm ring ⑯ , if the ring is turning.

When one frame has been exposed, the shutter's rear plane data are fed into motor driving circuit ㉓ . As mirror box motor ㉔ turns, the returning of diaphragm ring ⑯ and mirror ⑮ and the shutter charge are completed.

2-12-4 EXPOSURE COMPENSATION

The ASA resistor value is also used for exposure compensation. There is an ASA pattern on the ASA resistor ⑤ .
By turning the ASA dial ⑥ , the ASA film speed is changed.

(Example)

By setting the ASA dial ⑥ to +2, with ASA100, the same condition as with ASA25 may be secured.

2-12-5 TABLE OF COUPLING RANGES

Film speed								Aperture value										F-value at full lens opening
								1	1.4	2	2.8	4	5.6	8	11	16	22	1
									1.4	2	2.8	4	5.6	8	11	16	22	1.4
										2	2.8	4	5.6	8	11	16	22	2
											2.8	4	5.6	8	11	16	22	2.8
												4	5.6	8	11	16	22	4
25	50	100	200	400	800	1600	3200						5.6	8	11	16	22	5.6
		2	1	2	4	8	15		0	1	2	3	4	5	6	7	8	
	2	1	2	4	8	15	30	0	1	2	3	4	5	6	7	8	9	
2	1	2	4	8	15	30	60	1	2	3	4	5	6	7	8	9	10	
1	2	4	8	15	30	60	125	2	3	4	5	6	7	8	9	10	11	
2	4	8	15	30	60	125	250	3	4	5	6	7	8	9	10	11	12	
4	8	15	30	60	125	250	500	4	5	6	7	8	9	10	11	12	13	
8	15	30	60	125	250	500	1000	5	6	7	8	9	10	11	12	13	14	
15	30	60	125	250	500	1000		6	7	8	9	10	11	12	13	14	15	
30	60	125	250	500	1000			7	8	9	10	11	12	13	14	15	16	
60	125	250	500	1000				8	9	10	11	12	13	14	15	16	17	
125	250	500	1000					9	10	11	12	13	14	15	16	17	18	
250	500	1000						10	11	12	13	14	15	16	17	18	19	
Shutter speed								EV value										

Example: With a 50mm F1.4 lens mounted, set the camera to ASA100. If the LED indicator for F1.4 is turned on for a shutter speed of 2 sec., the brightness at this moment is expressed in terms of EV0.

2-12-6 SIGNAL FEEDING

1. Signal on shutter speed

B, 2, 1 - 1/1000 sec. .....electric resistance

Impressed voltage: 2.8V ± 3mV

Output voltage : B = 2.5V
2 ~ 1/1000 sec. = 2.1 ~ 1.0V
1 EV unit: 0.1V step

2. Signal on film speed

ASA25 ~ 3200 ..... electric resistance

Impressed voltage: 2.8V ±3mV

Output voltage : ASA25 ~ 3200 = 1.0 ~ 1.7V
1 EV unit: 0.1V step

3. Signal on F-stop value at full lens opening

F1.0 ~ F5.6 ..... electric resistance

Impressed voltage: 2.8V ±3mV

Output voltage : F1.0 ~ F5.6 = 1.0 ~ 1.5V
1 EV unit: 0.1V step

2-12-7 INPUT OF F-STOP VALUES AND POSITION FOR LOWINTENSITY WARNING

Symbol	f	F№	Input of F-stop value		Warning for low-intensity	Symbol	f	F№	Input of F-stop value		Warning for low-intensity
XZIIIA	57	1.2	−0.2	±0.1	F1.4	TNA	135	2.5	2.35	±0.2	F2.8 or F4
BEA	50	1.4	0.5	±0.2	F1.4 or F2	TEA	135	3.2	3.50	±0.2	F2.8 or F4
BEIIIA	50	1.4	0.5	±0.1	F1.4 or F2	TNIIA*	135	3.5	3.45	±0.2	F2.8 or F4
BGA	50	1.7	0.98	±0.2	F2	MEA	135	3.5	4.10	±0.1	F4
BGIIIA	50	1.7	0.98	±0.1	F2	UVA	200	3.5	3.51	±0.2	F2.8 or F4
BTA	50	1.8	1.20	±0.1	F2	TOIIA*	200	4.0	3.90	±0.2	F4
BRA	40	1.8	1.00	±0.1	F2	MFA	200	4.0	4.50	±0.1	F4 or F5.6
						TFA	300	4.5	4.80	±0.2	F4 or F5.6
IDA	15	2.8	2.60	±0.1	F2.8	TIA	300	6.3	4.80	±0.2	F4 or F5.6
IRA	21	2.8	3.0	±0.1	F2.8	TRA	400	5.6	2.50	±0.1	F2.8
ZIA	21	4.0	4.39	±0.2	F4 or F5.6						
ZVA	24	2.8	3.16	±0.2	F2.8	LJA	55	3.5	3.30	±0.2	F2.8 or F4
ISA	24	2.8	3.0	±0.1	F2.8	EBA	105	4.0	4.39	±0.2	F4 or F5.6
ICA	28	1.8	1.10	±0.1	F2						
ZJA	28	3.5	4.02	±0.2	F4	QCA	35~70	4.0	4.50	±0.1	F4 or F5.6
IHIIA	28	3.5	3.30	±0.1	F2.8 or F4	KRA	35~70	3.5	3.80	±0.1	F2.8 or F4
IHA*	28	3.5	3.30	±0.2	F2.8 or F4	QSA	35~100	2.8	2.90	±0.1	F2.8 or F4
ZUA	35	2.0	1.30	±0.2	F2	KFA	45~100	3.5	3.75	±0.1	F2.8 or F4
ILA	35	2.8	3.0	±0.1	F2.8	QWA	65~135	4.0	4.31	±0.2	F4 or F5.6
ZFIIIA	35	2.8	3.06	±0.2	F2.8 or F4	KZA	70~150	4.0	4.40	±0.1	F4
						QPA	80~200	3.5	4.24	±0.2	F4 or F5.6
XYA	85	1.8	0.81	±0.2	F1.4 or F2	KIA	80~200	4.0	4.10	±0.1	F4
UGIIA	100	2.8	2.91	±0.2	F2.8 or F4						

* Hexar lens

3. KEY POINTS FOR ASSEMBLY AND ADJUSTMENT

3-1 FILM WIND MECHANISM

3-1-1 MOUNTING OF MOTOR DRIVING UNIT

(1) The flexible print circuit plate of the motor dirving amplifier is apt to crack because of its bending or some other cause. While exercising care about its handling, stick it to six places with both-side adhesive tapes.

(2) Clean the place when the motor driving subassembly is to be soldered.

(3) Make sure that the soldered lead wires VB (red) and G (black) connected with the AE amplifier and the flexible print circuit plate do not rise to the surface.

3-1-2 ASSEMBLING OF FILM WIND UNIT

(1) All gears and levers must operate in a smooth manner.

(2) Spool rubber ⑮ must be fixed with adhesive (S640) and spool rubber fixing tape after it has been fitted to wind motor ⑯ .

(3) Spool friction spring sub-assy must operate in a smooth manner with a constant wind and rewind friction (150 ~ 250g for wind friction) after it has been built into spool gear ③ .

(4) Cam gear ② must turn only in one direction (the arrow direction) by means of a reverse prevention mechanism. (Reverse prevention force of more than 4kg.)

(5) Wind stop lever ⑤ is operated by the cam surface of cam gear ② . Wind switch plate ⑥ is must be turned on and off with wind switch earth pin ⑦ without a hitch. (Contact resistance of less than 0.5 Ω between ground and pink lead wire.) Wind stop lever ⑤ must be turned off when operated by the cam surface in the direction of arrow A. It must be turned on when operated by the cam surface in the direction of arrow B.

(6) Assemble the motor slip spring ⑰ so that the convex of the motor slip spring ⑰ comes to the wind motor ⑯ . Do not use the spring, once it has been taken off.

(7) Make sure that the backlash of the wind motor ⑯ in the direction of its spindle is 0.1 ~ 0.3mm when the first gear shaft washer ⑲ and the E-ring ⑱ are fitted.

3-1-3 MOUNTING OF FILM WIND UNIT

(1) Do not fail to clean the four armatures of the motor baseplate subassembly and the print circuit assembly above the wind motor ⑯ .

(2) Sprocket gear ① and cam gear ② must be built in according to the diagram given below.

(3) Operation of sprocket release lever ⑧ must not be hampered by the camera body's light tight.

(4) Sprocket stop lever ⑨ is operated by sprocket stop lever spring ⑪ to prevent sprocket shaft ⑩ form returning to the original position and by sprocket release lever ⑧ to return sprocket shaft ⑩ to the original position.

(5) Rewind switch lever ⑫ must be operated by sprocket shaft ⑩ to turn on rewind switch plate ⑬ and rewind switch earth pin ⑭ when sprocket shaft ⑩ has been pushed in and to turn them off when sprocket shaft ⑩ has been returned to the original position (contact resistance of less than 0.5Ω between ground and violet lead wire).

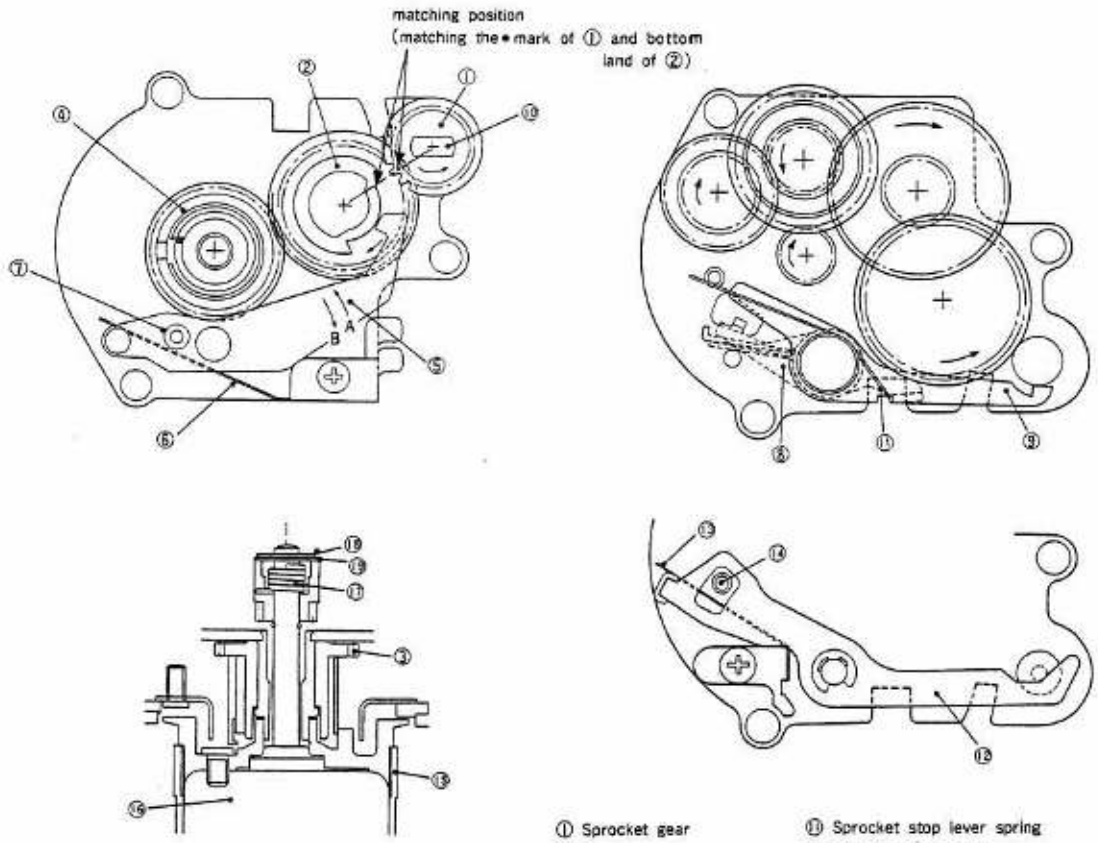

Fig.-24

① Sprocket gear
② Cam gear
③ Spool gear
④ Spool friction spring
⑤ Wind stop lever
⑥ Wind switch plate
⑦ Wind swith earth pin
⑧ Sprocket release lever
⑨ Sprocket stop lever
⑩ Sprocket shaft
⑪ Sprocket stop lever spring
⑫ Rewind switch lever
⑬ Rewind switch plate
⑭ Rewind switch earth pin
⑮ Spool rubber
⑯ Wind motor
⑰ Motor slip spring
⑱ E-ring
⑲ 1st gear shaft washer

(6) When the motor baseplate is to be welded with the motor driving amplifier, make sure that the neighbors do not come in contact with each other. After they are soldered, check conduction between MFC and VB.

(7) The non-load current must be less than 300mA at 5.35V (3 Ω).

3-1-4 ASSEMBLING OF COUNTER

(1) Counter gear ① and film counter transmitting gear ② must be assembled according to the gear positioning marks.

(2) To hook counter drum spring ③ , hook it on counter drum ④ and film counter baseplate ⑤ in advance.
Keeping the counter drum ④ in the initial state, raise the counter drum and turn it counterclockwise (in the direction of the arrow) two times, and assemble the counter plate.

(3) Whatever position counter drum ④ has returned from, counter switch ⑥ must be in contact with earth pin ⑦ .
(contact resistance of less than 0.5 Ω between ground and white lead wire)

(4) Counter switch ⑥ must not be earthed by counter switch set screw ⑧ .

(5) The counter switch ⑥ (Sc) must be turned on and off in the following condition.

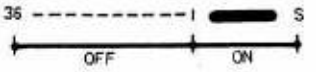

(6) When the scale plate is not in alignment with the index mark of the scale, their adjustment may be made by turning the counter drum ④ after the adhesive stuck to the counter drum ④ and the counter drum B ⑨ . After the adjustment is over, fix them with an adhesive.

3-1-5 MOUNTING OF FILM COUNTER UNIT

(1) Tighten the counter gear ① and the counter transmitting gear ② with set screws in a state where the gear position alignment marks are in alignment with each other.

(2) After the counter subassembly has been installed, make sure there is a gap between the counter lever spring ⑩ and the body.

(3) Make sure that the counter drum ④ may return to its original position from any position when the counter lever spring ⑩ is free and that the returning of the counter drum ④ is stopped when the tip of the counter level spring ⑩ is depressed about 1mm.

(4) Make sure that the counter lead wire (white) is not in contact with the ratchet of the counter drum.

(5) Soldered the motor driving amplifier while seeing to it that the neibors are not in contact with each other.
After the soldered is done, check conduction between the amplifier and the ground and between the amplifier and SC.

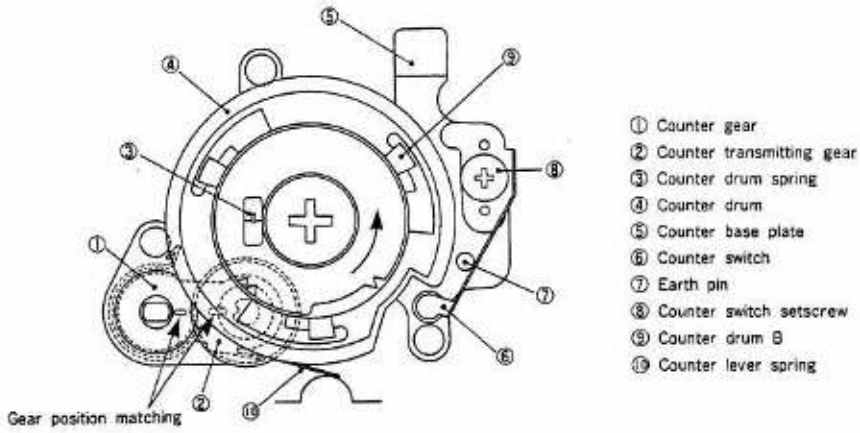

Fig.-25

3-1-6 GENERAL CHECK

(1) When only the body is checked, solder G and MSW on the motor driving amplifier (they are connected only for a check. Make sure that they are kept open when a check is not conducted).

Take off the red lead wire (SMM) on RL402, as it is not required.

(2) Insert four LR03 alkali manganese dry cells into the battery case and fit it to the body.

(3) When the backlid has been closed and the motor has operated to advance the film counter to "1", the film wind motor must automatically come to a stop.

(4) Check of the backlid switch (it is easier to check after the film counter unit has been fitted)

Switch is turned on after closing the backlid .....
The film wind motor will turn.

Switch is turned off after opening of the backlid .....
The film wind motor will stop.

(5) Check of the film rewind switch

When the backlid is closed with the film rewind button depressed, the motor must not turn. The motor turns when the film rewind switch is not turned on or the film wind switch remains turned on.

(6) The spool friction must range from 150 to 250g.

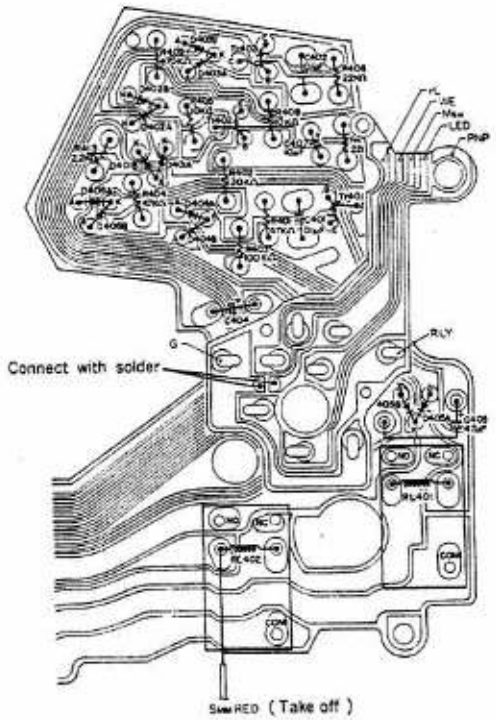

Fig.-26

3-2 MIRROR BOX

3-2-1 ASSEMBLING OF SHUTTER CHARGE BASEPLATE SUBASSEMBLY

(1) The gears must be position in the following sequence.
Slowly turn switch cam ③ in the direction of arrow A and stop it when it comes in contact with the tip of mirror box switch contact plate A ④ , fit the shutter charge baseplate sub-assembly with the positioning mark of shutter charge 2nd gear ① placed horizontally in the direction of the switch cam (position D).
The initial position of shutter charge gear ② is position B.

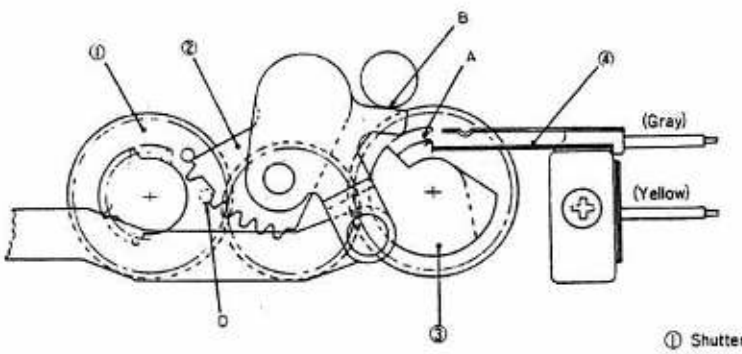

① Shutter charge 2nd gear
② Shutter charge gear
③ Switch cam
④ Mirror box switch contact plate A

Fig.-27

(2) In positioning the gears, make sure that mirror box switch contact plate ④ is not deformed.

(3) The contact resistance of the mirror box switch (between ground and yellow lead wire) must be less than 0.2Ω.

(4) Check the wiring.

3-2-2 ASSEMBLING OF DIAPHRAGM DRIVING GEAR BASEPLATE SUBASSEMBLY

(1) The positioning of the gear is done in the following sequence. Hold the dual-sliding section of worm wheel shaft ① horizontal and fit diaphragm ring driving small gear ② in worm wheel shaft. Here, fit diaphragm ring driving gear ③ so that its first pitch comes in gear with diaphragm ring driving small gear ② .

(2) Diaphragm driving gear lever ④ must be smoothly operated by diaphragm driving gear lever spring ⑤ .

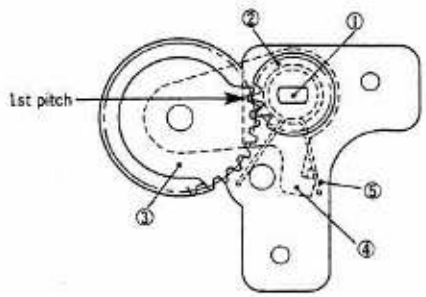

① Worm wheel shaft
② Diaphragm ring driving small gear
③ Diaphragm ring driving gear
④ Diaphragm driving gear lever
⑤ Diaphragm driving gear lever spring

Fig.-28

3-2-3 ASSEMBLING OF DIAPHRAGM DETECTING GEAR BASE PLATE

(1) F-senser Siemensster A ① must be securely fixed by Siemensster set screw ② and F-senser Siemensster B ③ by F-senser gear shaft bearing metal ④ .

(2) Siemensster set screw ② must be securely fixed to F-senser gear shaft ⑤ to transmit the rotation of F-senser gear ⑥ .

(3) F-senser Siemensster A and B must be placed in paralle to each other and there must be a gap of about 0.2 ±0.1mm.

(4) Note that the F-senser Siemensster are easy to deform.

(5) F-senser output leverl

i) Connect the (-) side of LED (gray lead wire) with the G terminal of the camera checker.

ii) Connect the (+) side of LED (red lead wire) with the C terminal of the camera checker. Here, set the volume with which the output at VO2' is regulated almost at the center.

iii) Switch the tester for resistance measurement and set it to the X100 range.

iv) Connect the (+) side of the tester with the (-) side of the photo-transistor (yellow lead wire) and the (-) side of the tester with the (+) side of the photo-transistor (brown lead wire).

v) Check changes in the resistance value by turning F-senser gear ⑥ .

When the F-senser's chart opened: Less than 1KΩ

When the F-senser's chart closed: More than 100KΩ

(6) Check the wiring of the F-senser (LED and photo-transistor).

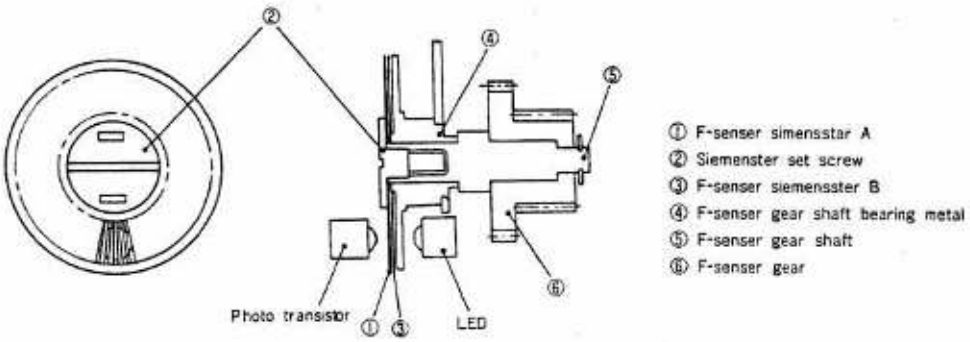

Fig.-29

3-2-4 ASSEMBLING OF MIRROR BOX'S LOWER UNIT

Assembling the front subassembly, upper baseplate subassembly, mirror box frame subassembly and mirror subassembly in advance then mount them in the following sequence.

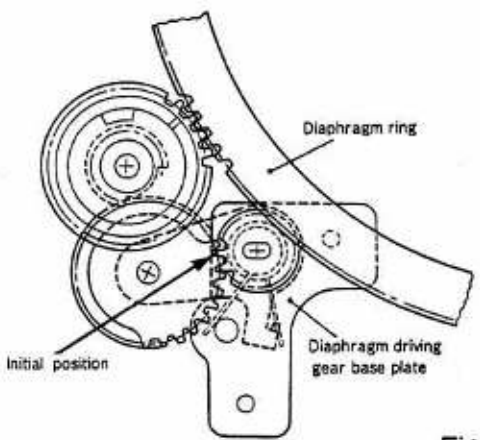

Fig.-30

(1) Fix the mirror box motor to the shutter charge baseplate. Next, install the diaphragm driving gear subassembly assembled in 3-2-2. Turn the mirror box motor shaft by the hand and set the diaphragm driving gear subassembly into the initial position (Fig. 30).

(2) Set the shutter charge baseplate subassembly into the initial position (Fig. 31) and equip it to the unit assembled in (1), above.

(3) Turn shutter charge gear ② in the direction of arrow A so that it will not come in gear with the dificit section of shutter charge 2nd gear ① . Connect the mirror box motor with the power source and turn the motor. Here, the current must be less than 20mA (Check at 4.5V) plus that of the motor itself.

(4) Check the wiring of the motor and mirror box switch.

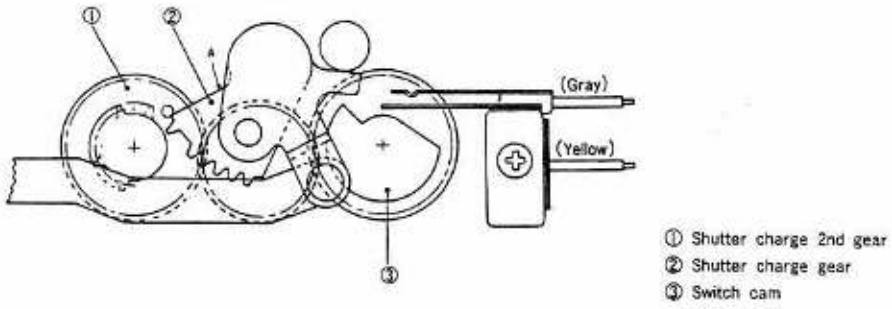

Fig.-31

3-2-5 ASSEMBLING OF FRONT UNIT

(1) Temporarily equip diaphragm detecting gear baseplate subassembly ① to the front baseplate subassembly.

(2) Drop diaphragm detecting gear ② to F-senser gear shaft ③ and put diaphragm ring drive spring ⑫ into position.

(3) Temporarily fit diaphragm detecting gear adjustment plate ⑤ to the prescribed position. Here, one end of diaphragm ring drive spring ⑫ must be hooked.

(4) Turn diaphragm detecting gear ② about 360° so that the gear positioning mark comes in alignment with diaphragm ring ⑥ in the position shown in Fig. 32. However, note that the positioning mark of diaphragm detecting gear ② must be in alignment with the first tooth of the toothed section of diaphragm ring ⑥ .

(5) Adjust the backlash of diaphragm ring ⑥ to less than 0.1mm in the position where roller adjustment plate subassembly ⑦ is fitted.

(6) Swing diaphragm detecting gear base plate ① in the direction of the arrow A and adjust the engagement so that diaphragm ring ⑥ and diaphragm detecting gear ② may turn in a smooth manner. Adjust the gap between the tooth crests and bottom lands of the gears to set it at about 0.2mm. After this adjustment, tighten the screw.

(7) Diaphragm ring release pin ⑧ must sink into the hole of diaphragm ring ⑥ when diaphragm ring ⑥ is returned to the initial position (Fig. 32).

(8) In a situation where diaphragm ring release pin ⑧ falls in diaphragm ring ⑥ , detach stop claw ⑨ from stop claw gear ⑩ . Here, when the engagement of diaphragm ring release pin ⑧ is released, diaphragm ring ⑥ must smoothly turn by tension of diaphragm ring drive spring ⑫ to the position of F22.

When this movement is not smooth, adjust it by moving the elongated hole of diaphragm detecting gear adjusting plate ⑤ After the adjustment, make sure that the set screw has been fully tightened.

(9) When diaphragm ring ⑥ is in the initial position, there must be a play of about 1.2mm with the tip of stop claw ⑨ and stop claw gear ⑩ .

(10) The gap between the stop claw ⑨ and the stop claw gear shaft ⑩ between the stop claw ⑨ and the diaphragm magnet lever ④ is adjusted with the fork of the stop claw release lever ⑪ .

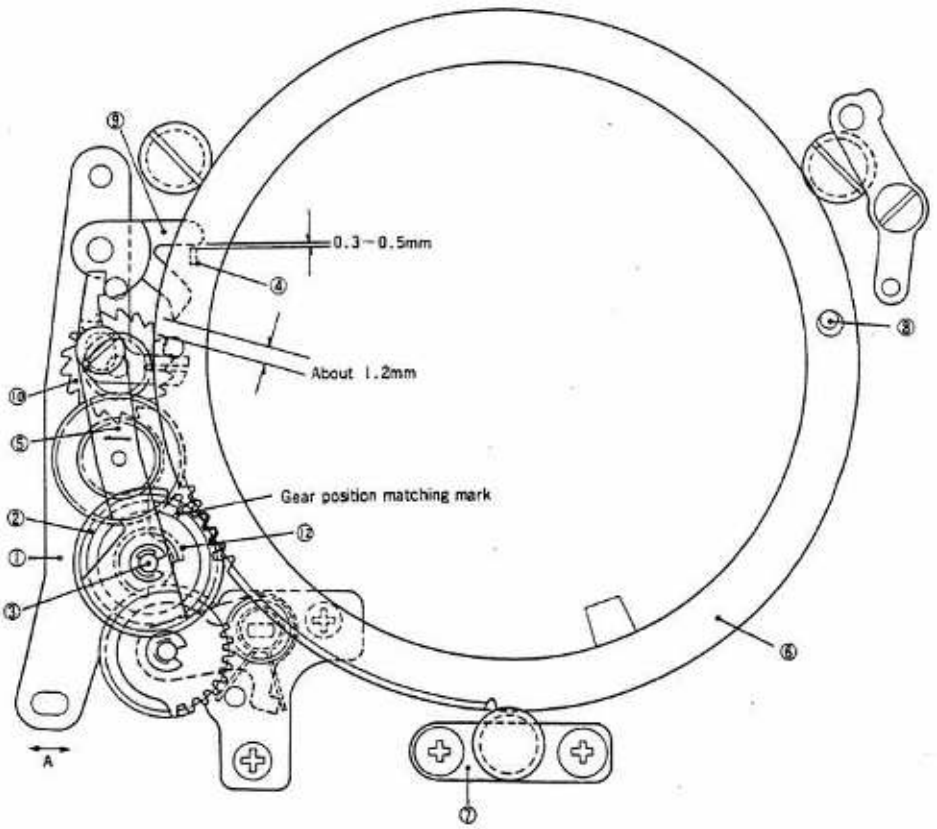

Fig.-32

① Diaphragm detecting gear base plate sub-assy
② Diaphragm detecting gear
③ F-senser gear shaft
④ Diaphragm magnet lever
⑤ Diaphragm detecting gear adjust plate
⑥ Diaphragm ring
⑦ Roller adjusting plate
⑧ Diaphragm ring release pin
⑨ Stop claw
⑩ Stop claw gear
⑪ Stop claw release lever
⑫ Diaphragm ring drive spring

3-2-6 ASSEMBLING OF MIRROR BOX

(1) Mounting of F-value Resistor Unit

i) With the F-value feed lever placed in the initial position (the position shown in Fig. 33), connect the C terminal of the camera checker with the VO2 lead wire of the F-value resistor and the camera checker's G terminal with G of the F-value resistor. Then make an adjustment with the camera checker's VO2' adjustment volume so that the resistance between the camera checker's VO2' and G may be set at 2.8V ±3mV.

ii) Connect the minus terminal of the digital multimeter with the F-value resistor's G and the plus terminal with the Fo lead wire to check the output voltage.

Specification: 1V ±10mV

iii) If the above specifications have not been met, make an adjustment with the variable resistor.

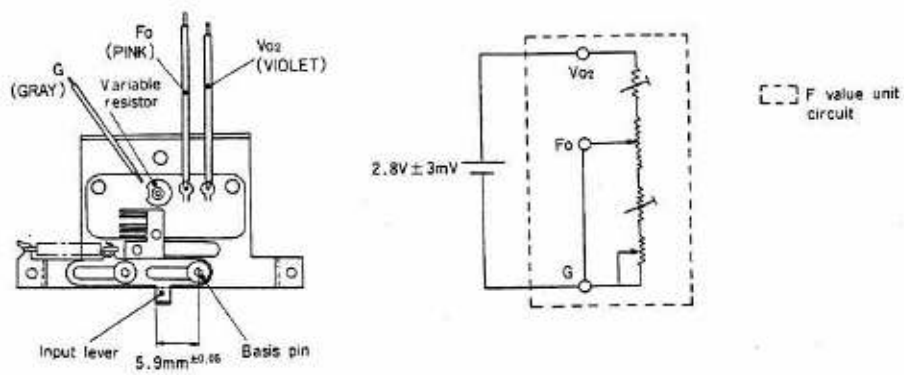

Fig.-33

(2) As mirror ① is slowly moved, make an adjustment so that it smoothly moves to hit the upper light shield plate mortprene when it is flipped up and to hit mirror angle adjust screw ② when it is flipped down (Fig. 36).

(3) Mounting of Diaphragm Magnet

i) Check of Operation

- When the lead wires (red .... + , green .... −) of the diaphragm magnet is supplied with DC6V, the magnet lever ① must be fully attracted.
- When a load on about 70g is applied to the tip of magnet lever ① , the lever must be placed in the absorbed state.
- Magnet lever ① must operate when it is made not conductive.

- o When each lever is made not conductive and set free, magnet lever ① must be put into contact with magnet ③ by spring ② .

- o When lever ⑤ is moved in the direction of the arrow, the switch must be turned on and the resistance between Ⓑ and Ⓒ must be less than 0.1Ω.

ii) Adjust

- o When the diaphragm magnet has been set into the prescribed position and the diaphragm ring has been placed in the initial position (the situation where the diaphragm ring release pin leals in), there must not be any gap between magnet ③ and movable plate ④ .

  When there is some gap, adjust the gap with magnet.

- o Do not fail to clean the section between the switch contact points and the adsorption surface of the magnet.

- o The gap between the switch contact points must be more than 0.2mm.

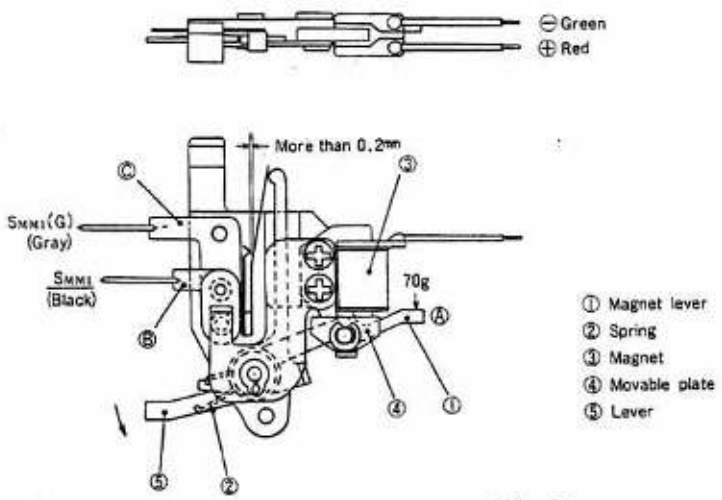

Fig.-34

(4) Mounting of Lower Mirror Box Unit

i) When the mirror box's lower unit which has been assembled in 3-2-4 is to be mounted, the mounting basis pin which is fitted to the shutter charge upper plate comes in the hole of the mirror box frame's index hole.

ii) The diaphragm ring is clicked up to the position of F22 when a standard lens (50mm F1.8) has been mounted, the engagement of the diaphragm ring pin with the diaphragm ring has been released and the engagement of the stop claw has been released.

iii) Put dedicated tool ⑤ into the shaft of the mirror box (on the side of the lead wires) and turn the motor clockwise 36 times, the diaphragm ring must be returned to the original position and the diaphragm ring is stopped by the diaphragm ring release pin.

* Do not turn the motor counterclockwise in any circumstances.

(5) Mounting of Release Magnet

i) Check of Release Magnet

o When a voltage of DC4.5V is momentarily added (red ..... + , light blue ..... -), in a situation where hook lever spring ① is depressed about 40° in the direction of the arrow movable plate lever ② must operate.

o When hook lever spring ① is set free without conduction, the movable plate lever must be sticking to the magnet.

Sticking power: more than 200g at the tip A of mavable plate lever

ii) When the release magnet is turned on (red ..... + , light blue ..... - , at DC4.5V), the release magnet works smoothly with the diaphragm ring and the mirror, and when the mirror is flipped up, the movable plate must be attracted to the magnet by the force of a spring.

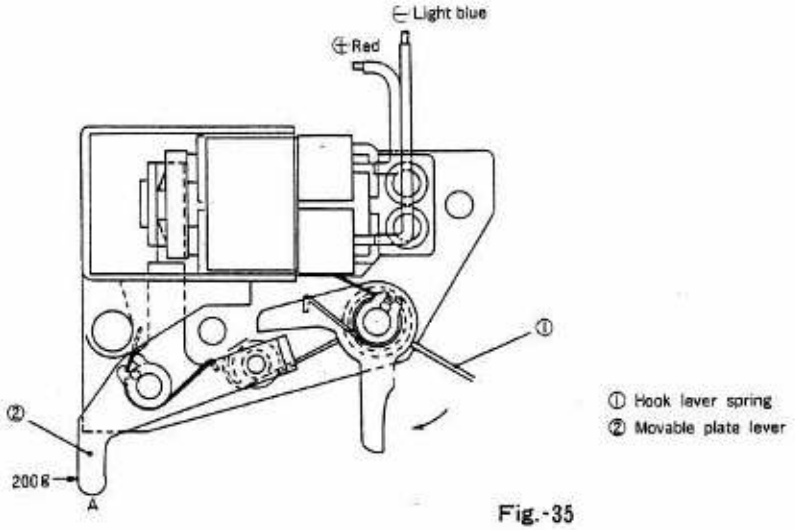

Fig.-35

(6) Mounting of Mirror Charge Gears

i) Turn the motor clockwise with dedicated tool ⑤ put into the mirror box motor shaft (on the side of the lead wires). The moment the mirror box switch has been turned off, and stop it (initial position of the shutter charge plate subassembly).

ii) Set mirror driving gear plate subassembly ④ to the mirror box frame so that it comes Fig. 36 position the positioning mark of mirror driving 5th gear ③ .

iii) Fit mirror driving 1st gear ⑤ in the states of i) and ii), above.

iv) After the motor shaft has been turned clockwise seven times, make sure that the gear position alignment mark of the mirror driving 5th gear ③ does not come above the vertical line.

v) The gap between the mirror driving 1st gear ⑤ and the tip of the motor shaft must be more than 0.1 ~ 0.2mm.

vi) Turning-on of Release Magnet

(red ..... + , light blue ..... - , at DC4.5V)

As hook lever ⑥ is detached from mirror driving gear ⑦ , mirror ① is flipped up.

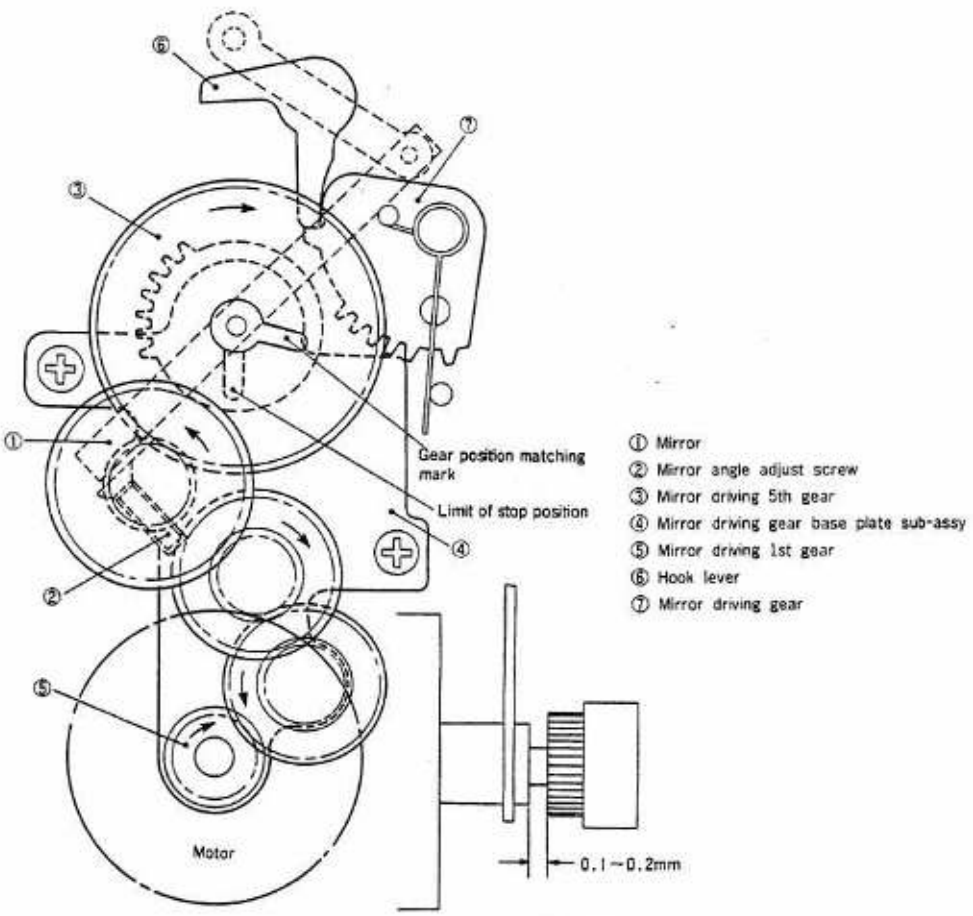

Fig.-36

vii) When mirror driving 1st gear ⑤ has been turned clockwise 36 times, hook lever ⑥ engages with mirror driving gear ⑦ , returning the mirror ① to the original position without fail.

(7) Wiring

Solder designated lead wires to specified points. Wire them as specifided so that they will not hamper the operation of each mechanism.

(8) Fitting of Shutter

i) Fix the shutter spacer in a state where the rear plane of the shutter is running.

ii) Fit the shutter earth plate to the release magnet side while the shutter is pressed downward.

iii) Tighten the screws, while they are set, in the order of the lowest screw upward.

iv) Make sure that the rear plane data lever of the shutter is alignment with the magnet's rear plane lever.

v) After the shutter has been fitted, charge the shutter, and fit the shutter charge arm of the shutter charge plate subassembly to the shutter.

vi) The load of the shutter's charge lever must be less than 900g when the shutter is set.

(9) General Checks

Use the camera checker and the pulse counter.

i) Connect the shutter checker's connector with that of the mirror box unit. Connect the connector section ③ of the camera checker with the connector section of the mirror box unit. Moreover, connect three lead wires with IC clips and one lead wire with an alligator in the following manner (connect them in the order of red, yellow, white and black; and when they are taken off, the order is reversed).

White (IC clip) ⟶ Black ..... Mirror box motor lead wire (-)

Yellow (IC clip) ⟶ Yellow .... Mirror box switch lead wire (SMM2)

Red (IC clip) ⟶ Red ..... Mirror box motor lead wire (+)

Black (clip) ⟶ G (Ground)

ii) Turn on power switch ⑭ and switch S1 ⑨ ..... (LP turned on).

iii) When the ● mark of F volume ⑥ is aligned with the F mark, aperture LED ④ is such that LED in the periphery of F4 must be turned on and LED at M must flicker. Here, LEDs at A, B, C and D must not be turned on.

iv) When LEDs at A, B, C or D is turned on, it means:

A: Release magnet's two lead wires are short-circuited with mirror box.

B: Diaphragm magnet's two lead wires are short-circuited with mirror box.

C: Shutter's yellow lead wire is short-circuited with mirror box and the shutter magnet is short-circuited.

D: Shutter's white lead wire is short-circuited with mirror box and the shutter magnet is short-circuited.

v) After switch 19 is set to VO2 and confirm the voltage of 2.8V between G .... - and C .... + , turn F volume 6 and turn of F diaphragm LED 4 at F2.0 ..... It means that the value of F2.0 is set.

vi) Moving the F-value lever, aperture LED (F2.0) turned off and F1.0 LED must flicker ..... Low brightness

vii) Mount an AE lens and set the AM switch downward (auto).

When the diaphragm ring of the lens is changed from automatic to manual or from manual to automatic after the corresponding LED light as follow.

Manual: Manual LED (M) must flicker

Automatic: Manual LED (M) must not flicker

viii) When S2 switch 16 has turned on (depressed) in the following condition, the mirror box unit must operate in one cycle (with a standard lens).

- o AM switch set to down position (automatic).
- o ST switch set to down position.
- o EF switch 13 remains neutral (AE mode).
- o Voltage switch set to 6V position.
- o T switch 7 set to 1/15 sec position .... in an arbitrary position.
- o Turn the F volume to flicker diaphragm LED 4 at F5.6 .... in an arbitrary position
- o Release switch depressed (single-frame shooting)

ix) Check of the number of pulses (with standard lens)

- o Connect connector 21 with the pulse counter.
- o Set EF switch 13 to F5.6.
- o Depress button 16 .

When the mirror box is operated in the above condition, the pulse counter must come in a range of 50 ±3. Here, the backlash is less than three pulses.

o The puls counter must indicate:

Left indicator: Standard number of pulses

Right indicator: The maximum number of pulses in backlash

x) Check of diaphragm diameter (with standard lens)

o Set the diaphragm ring to F5.6 depress button ⑯ and check the aperture in the manual mode.

o Next, set EF switch ⑪ to F5.6 and the diaphragm ring to AE depress button ⑯ to check by the eye the aperture diameter at F5.6 in AE.

o Make sure that there is no difference between the diaphragm diameter in the manual mode and the diaphragm diameter in the AE (F5.6).

xi) When the voltage switch is set to 5V, the mirror box must operate without a trouble.

Set the voltage switch to 5V and make sure that the mirror box functions without a hitch.

Also make sure that the mirror box unit functions without a hitch when the LR6 alkali dry cells for the connector cords are replaced with LR03 alkali dry cells.

xii) Mirror box unit's serial action follows the following order:

Button ⑯ depressed ⟶ release magnet detached ⟶ diaphragm ring moved ⟶ mirror flipped up ⟶ shutter operated ⟶ mirror box motor turned ⟶ diaphragm ring returned and mirror returned ⟶ shutter charge.

o Mirror remaining flipped up

Unless the mirror driving gear's hook has come off after button ⑯ was depressed to operate the release magnet, the shutter and the mirror box motor are operated, and after the operation of the mirror box motor has been completed, the mirror remains flipped up. In this situation, adjust the action of the lever in the release magnet so that the hook may come off with ease, Also check the action of the diaphragm ring release pin.

- Mirror box motor stopping halfway

  Check a rise in the shutter's set torque a drop in the motor's performance and the diaphragm driving gear's engagement.

- Continuous shooting

  Short-circuit of the mirror box switch and rear plane switch (in the diaphragm magnet).

- Shutter speed defective

  Replace the shutter unit, which does not meet specifications.

3-2-7 ASSEMBLING OF PENTA-PRISM UNIT

(1) When the penta-prism unit is built into the penta-prism, frame the focusing plane of fresnel lens ⑥ being placed on the side of the penta-prism, make sure that the fresenel lens is not marred.

(2) Glue the scale plate in parallel to the light guide. There should be no scratches and dirt, nor should the glue stick out.

(3) When the light guide is glued in parallel to the pentaprism, the center of the pentaprism holder's light shield sub-assembly must be in alignment with that of the light guide's convex lens.

(4) Make sure that the reflecting and transmitting planes of the light guide are not spotted with glue.

(5) All parts of the penta-prism unit must be built in the lower corner on the side of the LED subassembly of penta-prism frame ① .

(6) For the hooking of the pentaprism set plate ③ and the penta-prism set spring ④ , hook the groove of penta-prism set plate ③ on the penta-prism frame ① first and then the penta-prism set spring ④ .

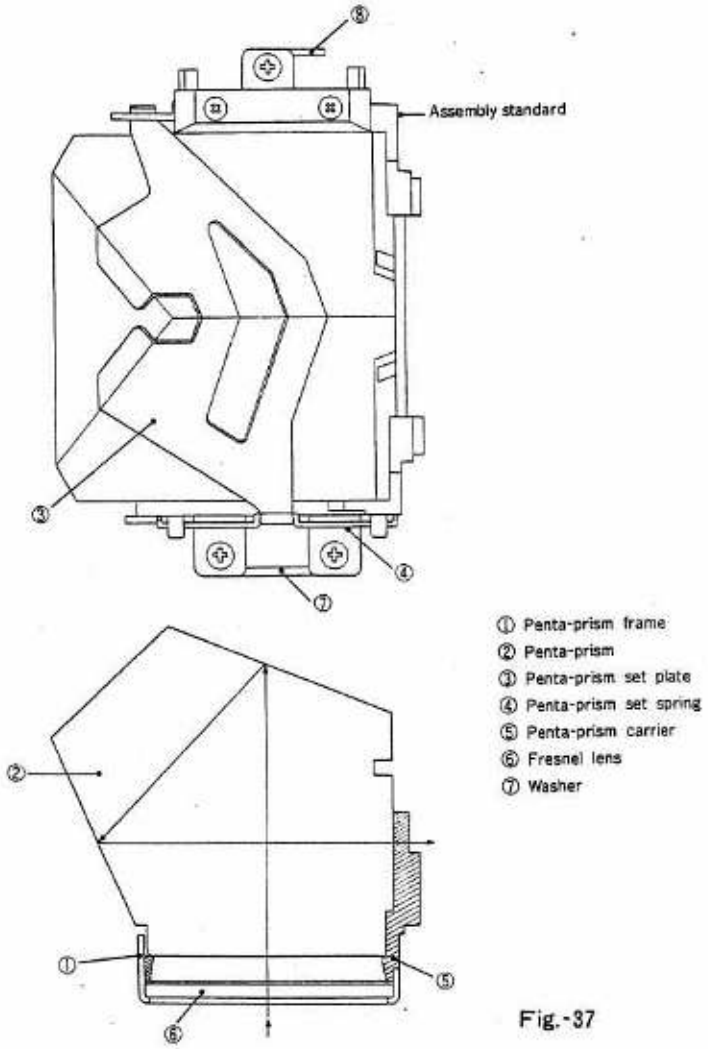

Fig.-37

3-2-8 FITTING OF PENTA-PRISM UNIT AND FOCAL ADJUSTMENT OF FINDER

(1) The flangeback, as in the case of the earlier cameras, is 40.66 ±0.02mm on the No.1, No.4 rail surfaces.

Finder focus is 40.52 ±0.02mm

(2) Focal adjustment is done by replacing the washer under the penta-prism frame mounting assembly in a range of ±0.6mm. The right washers are different from the left ones (A series ⑦ , B series ⑧). With the right and left washeres in one and the same series, the thickness comes in eight different kinds with the thickness of the standard washer set at 0.6mm (t=0.6, 0.5, 0.4, 0.3, 0.2, 0.1, 0.05 and 0.03).

3-3 ASSEMBLING OF BODY UNIT AND MIRROR BOX UNIT

3-3-1 CARE ABOUE ASSEMBLING

(1) In a state where the motor driving amplifier of the penta-prism assembly is uplifted, put the mirror box unit into the

front of the body. Next, press the upper plate of the mirror box onto to the fitting surface of the upper part of the rail surface. Tighten the front assembly of the mirror box with three screws and the upper plate with two screws.

(2) Make sure that the four lead wires (one each in red and yellow and two in black) of the mirror box unit and the lead wires (red and black) which come out of the motor driving amplifier do get jammed in.

(3) See to it that the motor driving amplifier's flexible print circuit plate is not damaged.

3-4 MOUNTING OF ASA RESISTOR

3-4-1 CHECK OF ASA RESISTOR

To measure ASA resistance, the VO2' and G terminals of the camera checker are connector with those of the resistor, and the output voltage is measured with an input voltage of 2.8V ±3mV.
The input of 2.8V ±3mV is measured after the resistor unit has been connected and the voltage between the VO2' and G terminals of the resistor and those of the camera checker are measured.

(* Mounted of the connecter cord on the camera checker)

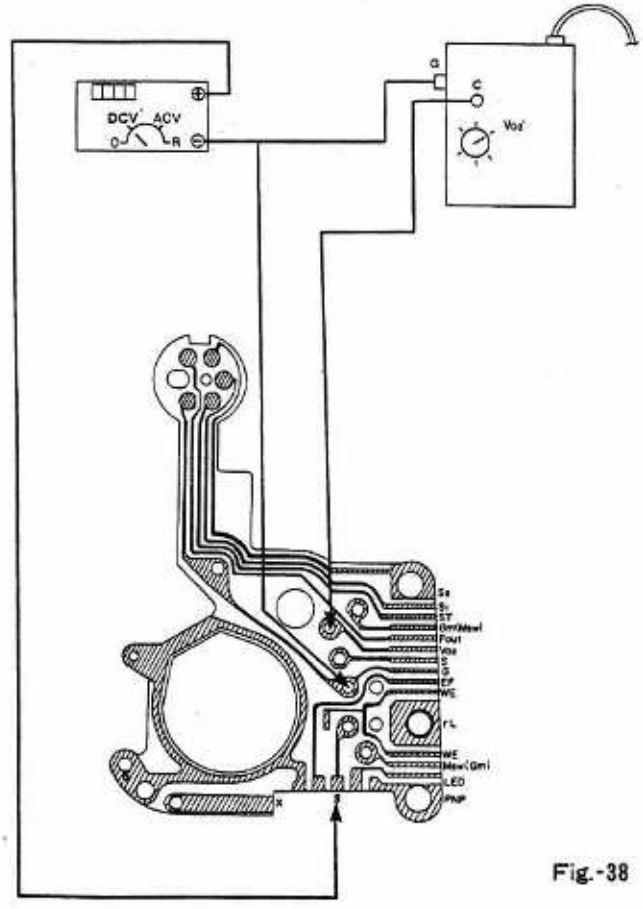

Fig.-38

〔ASA Resistor〕 ± 10mV

ASA	Voltage (V)	ASA	Voltage (V)
3,200	1.7	200	1.3
1,600	1.6	100	1.2
800	1.5	50	1.1
400	1.4	25	1.0

* Digital multimeter + ... S terminal,
Digital multimeter - ..... G terminal

3-4-2 MOUNTING OF ASA RESISTOR

(1) See to it that the lead wires (blue and black) are not jammed in nor are six contact plate deformed.

3-5 MOUNTING OF AE AMPLIFIER

(1) Clean the surfaces of the AE amplifier and flexible print circuit plate. After they are closely adhered to each other, make sure that they are steadily pressed with the connector set rubber B ③ and the connector set plate ④ and that the connector set plate ④ presses the flexible print circuit plate with the V groove coming in the lower part.

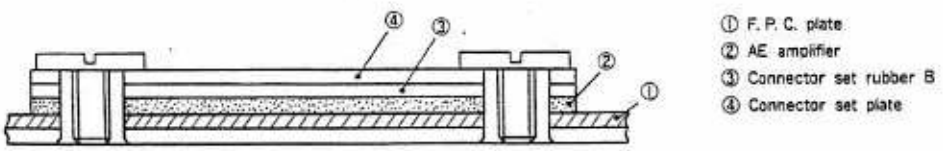

Fig.-39

(2) After it is ascertained that an LED spacer is glued to the LED indicator section, fix it with LED set screws while seeing to it that the LEDs of the AE amplifier may not be accidentally cracked.

(3) "Fin" and "Fout" on the AE amplifier will be soldered.

(4) The light intake section of the AE amplifier is apt to crack. Be careful when it is fitted to the penta-prism holder.

(5) Clean the surfaces where the motor driving amplifier, ASA resistor and AE amplifier come in contact with one another with a cleansing liquid. After they are closely put together, set them with the connector set rubber and the V groove of the connector set plate coming in the lower part.

3-6 MOUNTING OF T RESISTOR

3-6-1 CHECK OF T RESISTOR

For the measurement of the T resistor, set the constant direct-current voltage to 2.8V ±3mV (measured with a digital volameter) and measure the output of the T terminal with the digital voltameter after the plus terminal is connected with VO2 of the T resistor and the minus terminal with G.

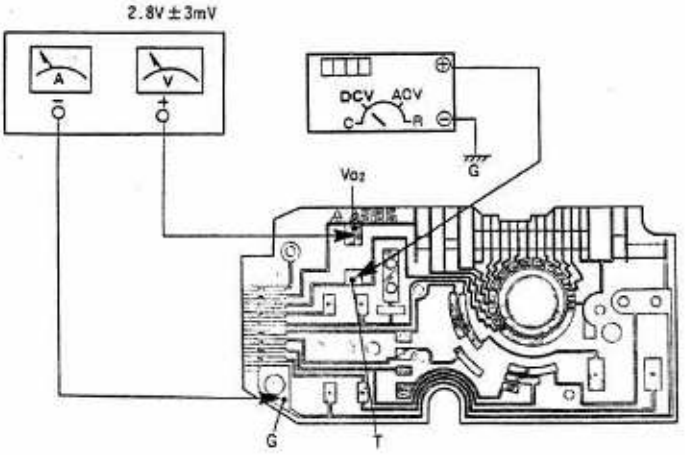

Fig.-40

〔T Resistors〕 ±10mV

Shutter Speed	Voltage (V)	Shutter Speed	Voltage (V)
B	2.5	1/30	1.5
2	2.1	1/60	1.4
1	2.0	1/125	1.3
1/2	1.9	1/250	1.2
1/4	1.8	1/500	1.1
1/8	1.7	1/1000	1.0
1/15	1.6		

* Digital multimeter + ... T terminal

Digital multimeter - .... G terminal

3-6-2 MOUNTING OF T RESISTER

(1) Clean with a cleansing liquid the surfaces of the AE amplifier and the T resistor which come in contact with each other. After they are closely adhered to each other, the T resistor will be installed with the set plate rubber and the set plate coming on the side of the V groove.

(2) The green lead wire of the AEQ is fitted or taken off on the T resistor (do not absolutely do it on the HBIC).

3-7 MOUNTING OF TOP COVER

3-7-1 GENERAL CHECK

(1) Check of Motor Driving Amplifier

The following defects indicate that the motor driving amplifier is defective.

i) The LEDs in the finder do not go out when the film is transported.

ii) The mirror box motor does not stop and only the mirror box goes into action.

iii) The diaphragm remains open.

iv) The mirror does not go down.

In the cases of iii) and iv), check and see if the yellow lead wire from the mirror box switch is properly soldered with the motor driving amplifier.

(2) Check the connection between the AE amplifier and the connector section and between the ASA resistor and the T resistor.

(3) Check and see if the self-timer LED is on.

(4) Check and see if the LEDs in the view finder are on.

(5) Check and see if the LEDs in the viewfinder are on in the AE mode.

(6) Check the aperture.

3-7-2 CARE ABOUT MOUNTING

(1) Clean with a cleansing liquid the six contact plate of the ASA resistor and make certain that they are neither bent nor deformed.

(2) The clean the contact surfaces of the FC flexible print circuit and the ASA resistor and fix the top cover.

(3) Set the S/C switch knob into the C position.

(4) Check the single-frame and continuous shooting actions (S/C switch).

(5) Check the Winding (Winding of Two Frames in Single-Frame Shooting)

i) If the film wind switch is not turned off, adjust the turning on and off of the switch.

ii) If the film wind switch is once again turned on due to a delay the feeding of a signal from the motor driving amplifier, which receives an "OFF" signal from the film wind switch and controls the operation of the film wind motor, though the turning on and off of the film wind motor is normal, the motor driving amplifier is defective.

3-8 AE ADJUSTMENT

3-8-1 ADJUSTMENT OF OUTPUT VOLTAGE AT V_{O2}

(1) Adjust the input voltage of the T resistor and ASA resistor. 2.8V ±3mV at the center of the variable resistor (V mark) and G (body's earth).

(2) Measure the condition in which S1 of the release button is turned on (first stroke). For adjustment, use dedicated tool ⑥ .

(3) The adjustment of VO2 is related to the precision of the AE system, shutter speed and indications in the view finder. So make this adjustment accurate.

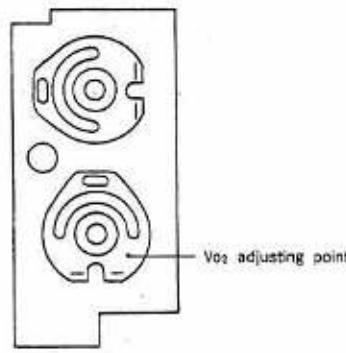

Fig.-41

3-8-2 LEVEL ADJUSTMENT

Adjust the level in the following manner, and the exposure will be adjusted.

(1) Set the shutter speed to 1/250 sec with ASA100.

(2) Mount the camera with standard lens and train it at a light intensity of LV12. Here, measure the voltage between Fout and G.

1.4V ±10mV ..... Measured with the release button S1 turned on.

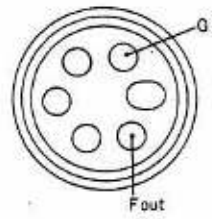

Remote control socket

Fig.-42

(3) The level adjustment is done with variable resistor

(L mark) ..... Use dedicated tool ⑥ .

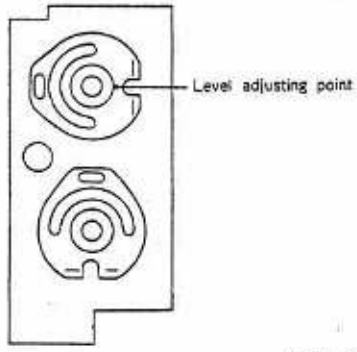

Fig.-43

3-8-3 EXPOSURE ADJUSTMENT

(1) Ensure that the exposure is within the standard given in the accompanying table below in the combination shown.

ASA 100

Brightness	LV9	LV12	LV15
Shutter Speed	1/60	1/125	1/250
Aperture	2.8	5.6	11
Standard	±0.8EV		

(2) If the values do not agree with the specifications, adjustment must be made once again with the level adjusting variable resistor. Here, the adjustment must be made so that the turning on of LEDs in the view finder may not be shifted in position. (however, allowable up to ±1 aperture)

(3) Two variable resistors are fitted to the AE amplifier. Do not move them in any imprudent.

3-9 ASSEMBLING OF BACKLID UNIT

(1) The sprocket A and the spool roller must smoothly operate with out scratch.

(2) Make sure that the sprocket roller B is not marred and properly functions and that in conjunction with its revolution, the indicator plate also turns.

(3) The spool roller plate must be depressed by the spool roller plate spring with a pressure of 40 to 50g.

(4) There must not be scratches on the pressure plate. The pressure on the plate must be more than 250g with less than 0.03mm of flatness.

(5) The movable hinge shaft must vertically operate.

(6) The light tight moltprene and leather, backlid stopper must be securely glued, and no glue should stick out.

3-10 HOW TO USE CAMERA CHECKER AND PULSE COUNTER

3-10-1 NAME OF EACH PART OF CAMERA CHECKER

① Power input terminal

② Fuse 250V, 1A

③ Connector: Connected with the camera's connector section with the cord, available as an accessory.

④ LED (Red): The same indication as LEDs in the view finder

⑤ LED (Green): A ..... Release magnet's operation checked

B ..... Diaphragm magnet's operation checked

C ..... Shutter lead plane magnet's operation checked

D ..... Shutter rear plane magnet's operation checked

LM ..... Mirror box motor's operation checked

ST ..... Self-timer's operation checked

Each LED is turned on when each mechanism is put into function.

⑥ F volume: May be set at aperture values of F1.0 to F22

⑦ T dial : Shutter speed may be set at B, ", to 1/1000 sec.

⑧ LED (LP): Turned on when the POW and S1 switches are turned on.

⑨ Indicator switch (S1) : All circuits put into operation and indications lit when the switch is turned on.

⑩ Release switch (S2) : Continuously operated with the switch turned on.

⑪ Auto-manual switch (AM): Manual ..... up

Automatic ..... down

⑫ Self-timer switch (ST) : Self-timer set with the switch turned on.

⑬ EF changeover switch (EF) : Up ..... electronic flash signal at F5.6

Down ..... electronic flash signal at F11

Neutral .... AE

With the use of the AE switch, the shutter speed is switched to 1/100 sec. For normal use, make sure that the switch is set neutral.

⑭ Power switch (POW)

⑮ Voltage changeover switch : Switchable to 5 and 6V DC. Normally, check at 6V.

⑯ Push button release switch : In one action in series with S2 of ⑩ .

⑰ Reset switch (WE) : The switch depressed and the circuit reset when the mirror box is not connected or when no WE signals come out because of abnormal-function (LED for F-value cannot be turned on).

⑱ Adjustment volume (VO2') : Fine adjustment volume of 2.80V when changeover switch ⑲ is set to VO2'.

⑲ Changeover switchs :

FS : FS signals from the mirror box may be checked.

VO2 : Check of 2.80V to assure the precision of the checker's T dial and F volume.

VO2' : For check of T, ASA and F-value resistor and fine adjustment of 2.80V. Measure after the abjects to be measures are connected.

F : Check of the voltage to set the F volume in the checker.

T : Check of the voltage to set the T dial in the checker.

The signal from the changeover switches may be checked between terminal C ⑳ and terminal G ㉒ .

⑳	Terminal C	:	Output terminal for signals from changeover switch ⑲ .
㉑	FS output terminal	:	Terminal for connection with the pulse counter.
㉒	Terminal G	:	Earth terminal used for output from terminals VB and C.
㉓	Terminal VB	:	Output voltage selected by voltage changeover switch ⑮ .

3-10-2 NAME FOR PULSE COUNTER

①	Power input terminal		
②	Fuse		
③	Indicator LED (Tn)	:	Fs signal pulses indicated, with an automatic reset mechanism.
④	Indicator LED (Δn)	:	Indicates the difference in FS signal pulse between the first, second and third. inputs. $\Delta n = Tn - Tno$
⑤	Pilot light	:	Indicates power ON.
⑥	Power switch	:	ON/OFF
⑦	L.CHECK switch	:	LED tester. Lights when switched on if all segments are functioning.
⑧	Reset switch	:	Resets all counter readings.
⑨	FS input terminal	:	Input terminal for FS signals from the camera checker.

3-10-3 METHOD OF USE

i) Connect the pulse counter with ⑨ and ㉑ of the FS checker with an accessory cord.

ii) Turn on power switches ⑥ and ⑭ .

iii) After cleaning of joint and connect the connector of the FS checker with that of the mirror box. Set it with 04103, and accessory screw. The lead wires with clips are:

White (IC clip) ⟶ Black (Mirror box motor lead wire ⊖)

Yellow (IC clip) ⟶ Yellow (Mirror box switch lead wire SMM2)

Red (IC clip) ⟶ Red (Mirror box motor lead wire ⊕)

Blck (clip) ⟶ G (Ground)

iv) Set changeover switch ⑲ to VO2 and check the voltage of 2.8V. Turn F volume ⑥ and turn on LED ④ at F2.0 ..... Feeding of the F-value for F2.0 has been completed.

v) While the F-value lever is manually operated, make sure that the flickering of LED ④ is changed from F2.0 to F1.0 ..... Warning for under exposure.

vi) When the following conditions are prepared and button ⑯ is depressed, the mirror box must operate in one cycle.

- o AM switch ⑪ ..... automatic
- o ST switch ⑫ ..... OFF
- o EF changeover switch ⑬ ..... neutral (AE)
- o Voltage changeover switch ⑮ 6V
- o T dial ..... arbitrary position
- o F volume ..... arbitrary position
- o Release switch ..... OFF

Here, LEDs at A, B, C, D and LM are arbitrarily turned ON to operate the mirror box unit at an arbitrarily set shutter speed with an arbitrarily set aperture.

vii) Ascertainment of FS signal (pulse)

- o Depress L check ⑦ and check LED.
- o Depress reset ⑧ to reset the counter. Here, Tn indicates 001 and Δn indicates 00.
- o Depress button ⑯ to operate the mirror box. The number of pulses corresponding to the aperture value set by F volume ⑥ is indicated.

±3 pulse

Aperture	1.4	2	2.8	4	5.6	8	11	16	22
Pulse number	10	20	30	40	50	60	70	80	90
Standard voltage	1.10	1.20	1.30	1.40	1.50	1.60	1.70	1.80	1.90

viii) Set EF changeover switch ⑬ to F5.6 or 11, and LED at F5.6 or 11 will flicker.

ix) Turn ON ST switch ⑫ and depress button ⑯ , and the self-timer will go into operation and ST (LED) will flicker.

3-10-4 USE OF CONNECTOR CORD

The box-shaped switch installed along the connector cord is used to switch one type of batteries to the other.

LR6 alkali dry cells

LR03 alkali dry cells

3-10-5 GENERAL CASE FOR ASSEMBLING

In case the mirror box unit, which has properly operated, is built into the body's unit and fails to operate improperly or properly with the use of the checker, there is something mechanically wrong with the AE amplifier or the connector conducting part's conduction is defective.

3-10-6 SWITCHING OF INPUT VOLTAGE

- Take off two (upper and lower) on the fronts of the FS checker and pulse counter and two screws on the sides.
- Insert a fuse in the prescribed input voltage position.

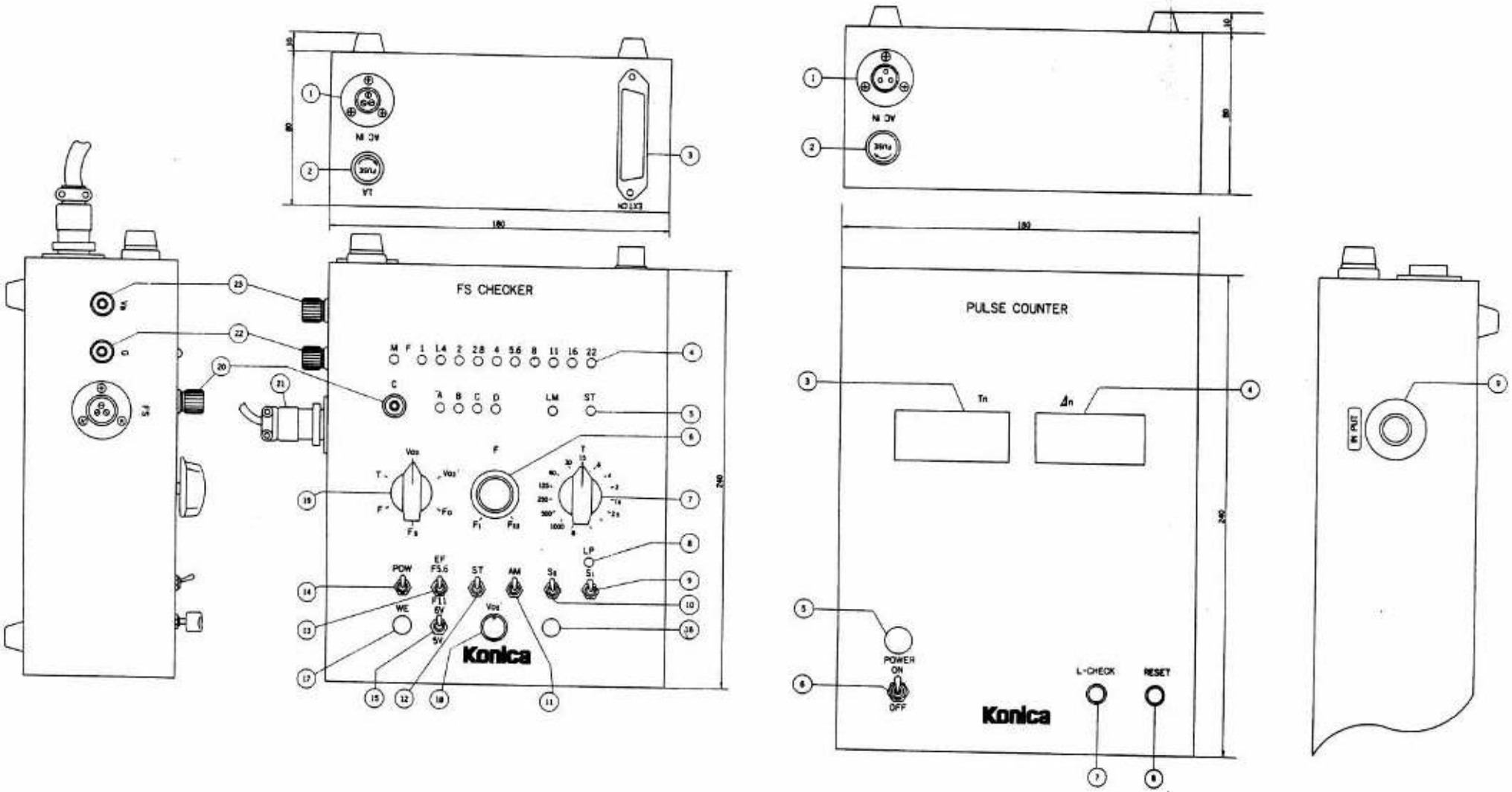
FS CHECKER
M F 1 1.4 2 2.8 4 5.6 8 11 16 22
C
A B C D
LM
ST
F
POW
EF
FS.6
ST
AM
LP
WE
6V
5V
Konica
PULSE COUNTER
Tn
Δn
POWER
ON
OFF
L-CHECK
RESET
Konica
AC IN
IN PUT
180
240

3-11 AE AMPLIFIER

3-11-1 CIRCUIT DIAGRAM

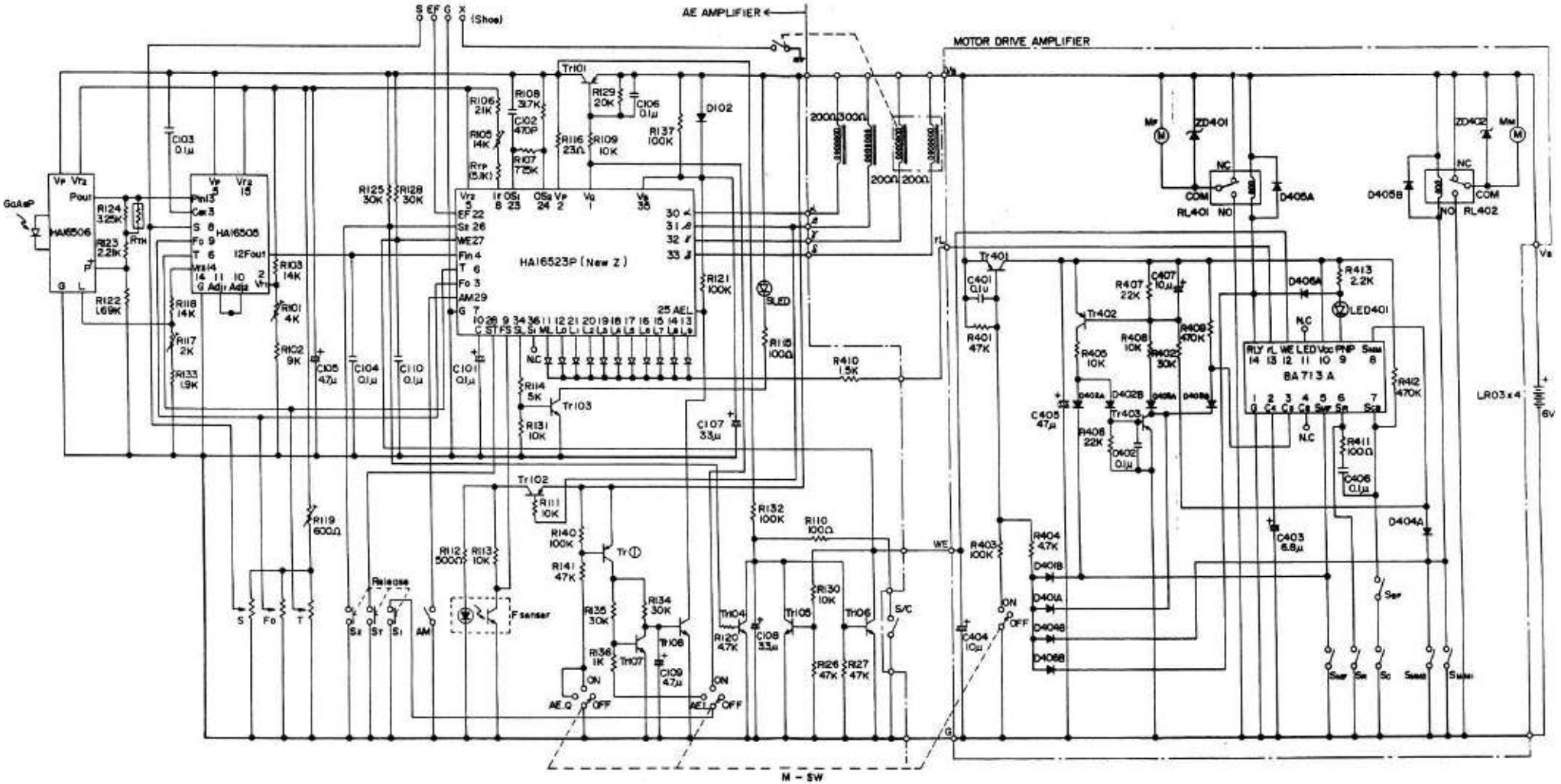

3-11-2 DESCRIPTION OF TERMINAL NAME, TERMINAL FUNCTION AND VOLTAGE

	Terminal name	Function	Voltage(S_1 is OFF)	Voltage(S_1 is ON)	Remark
1	Va	Power source (Plus)	6 V	6 V	Battery voltage
2	Vp	AE-AMP power source	0	5.4~5.7	
3	S_1	AE-AMP power source switch	5~6	0	
4	Se	Release switch	0	0.7~1	
5	ST	Self mode transfer signal	0	0.7~1.2 Self operate	Self operate→G (AE mode) Open circuit (Self mode)
6	T	Shutter speed data	0	1.4(1/60)	1.0(1/1000)~2.5(8)
7	S	ASA data	0	1.2(100)	1.0(25)~1.7(3200)
8	Fo	F value opening data	0	1.1(F1.4)	1.1(F1.4)~1.9(F22)
9	α	Release magnet signal	6	6	
10	β	Diaphragm magnet signal	6	6	
11	γ	Shutter lead blade magnet signal	6	6	
12	δ	Shutter rear blade magnet signal	6	6	
13	Vos	T, S, and Fo basic voltage	0	2.8	2.797~2.803
14	Vr1	Produces fixed voltage (Vr1) of IC16505	0	1~1.4	
15	Vr2	AE-AMP basic voltage	0	2.9~3.1	Standard 2.94
16	Vr3	Lebel adjustment fixed voltage	0	1~1.3	
17	Pout	Light data (output of IC16506)	0	0.3~1	
18	Pin	Light data (input of IC16505)	0	0.3~1	
19	Fout	Diaphragm data (output of IC16505)	0	1~2	1.1(F1.4)~1.9(F22)
20	Fin	Diaphragm data (input of IC16523)	0	1~2	1.1(F1.4)~1.9(F22)
21	FS	Signal from F-senser			Refer to wave form
22	V_0	TR101 is turned on at same as S_1	5~6	0	
23	Level	Adjustment of light Meter-AMP level	0	0.1~0.4	
24	EF	Auto-electronic flash correlation signal charging	0	2~3	0(F5.6 Auto) 5.4~5.7(F1.1 Auto)
25	AM	Auto-manual conversion signal	0	0.7~1	0.7~1(Auto) 0(Manual)
26	SLED	Self timer LED control signal	4~6	4~6	
27	SL	Self-timer LED signal	0	0	
28	WE	Wind end signal	0	0.7~1	
29	FLED	F-senser LED	0	0	
30	rL	Control of view finder LED	0	0	
31	OS_1	Basic frequency production			Refer to wave form
32	OS_2	Basic frequency production			Refer to wave form
33	C	For A/D conversion			Refer to wave form
34	AEL	AE look control signal	5~6	5~6	AE look mode S_1—OFF 5~6 S_1—ON 0
35	AEQ	AE look control switch	0	0	AE look mode
36	S/C	Single, continues change signal	0	0	
37	G_m	Power source (minus)	0	0	G_m=Msw Ground to main switch on
38	G	Power source (minus)	0	0	

Note 1 : That the switch S_1 is turned on means the release button steps into the first phase as it is slightly pressed down.

Note 2 : The aforementioned voltage values are based on the following conditions.

a. The voltage of the power source is 6V.
b. The backlid is closed after it has been opened.
c. The camera is in the initial condition.
d. The camera's lens is set to the AE mode.
e. The main switch is ON.

Note 3 : Equations of Fout, Adj_1 and Adj_2.

$Fout=(T+S+Fo)-3Pout$

$Adj_1=Adj_2=(T+S+Fo)/3$

Note 4 : Setting of Standard Voltage.

IC16505→Vr_1→Vr_2→Vos

IC16505→Vr_3→Level

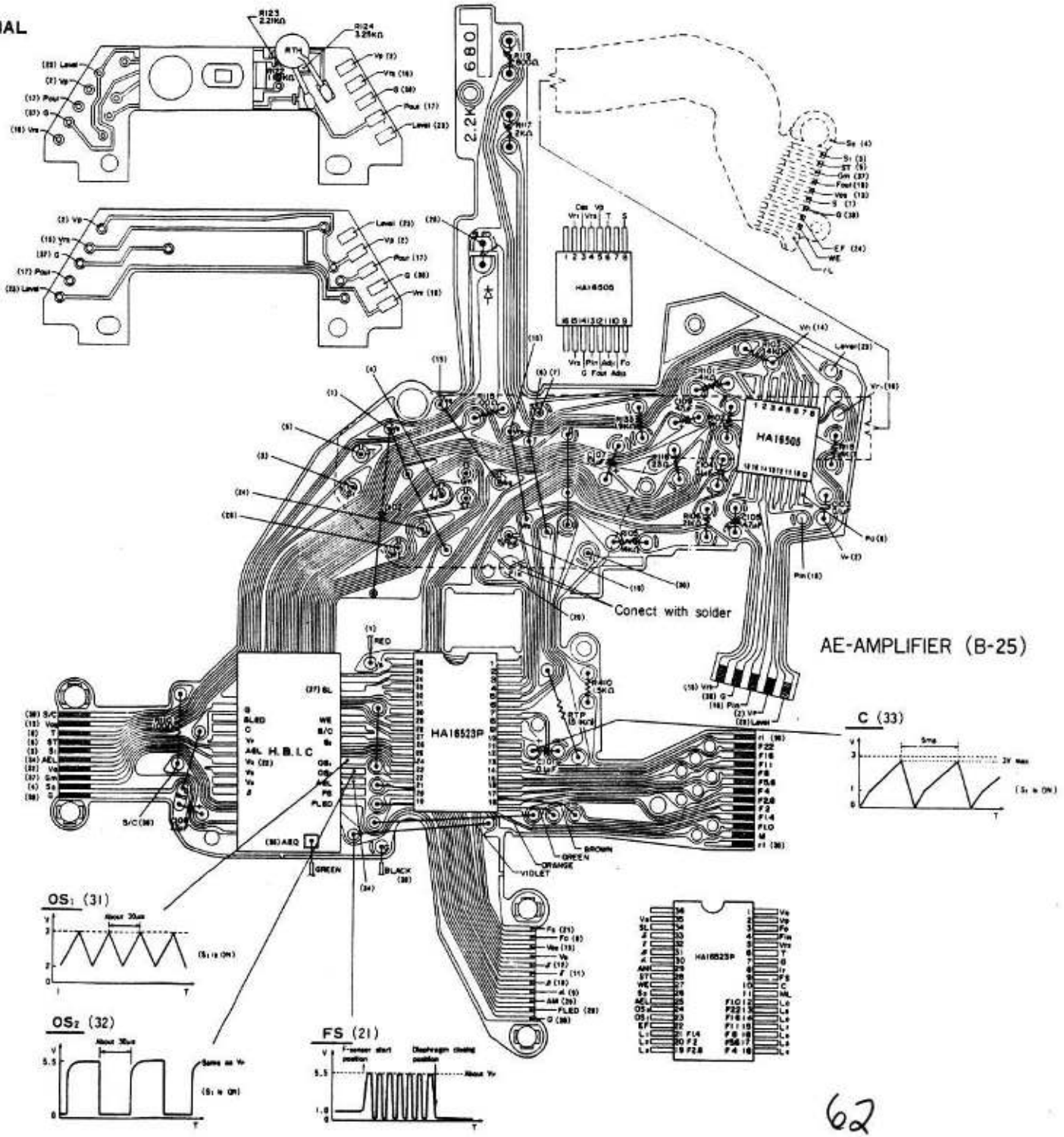

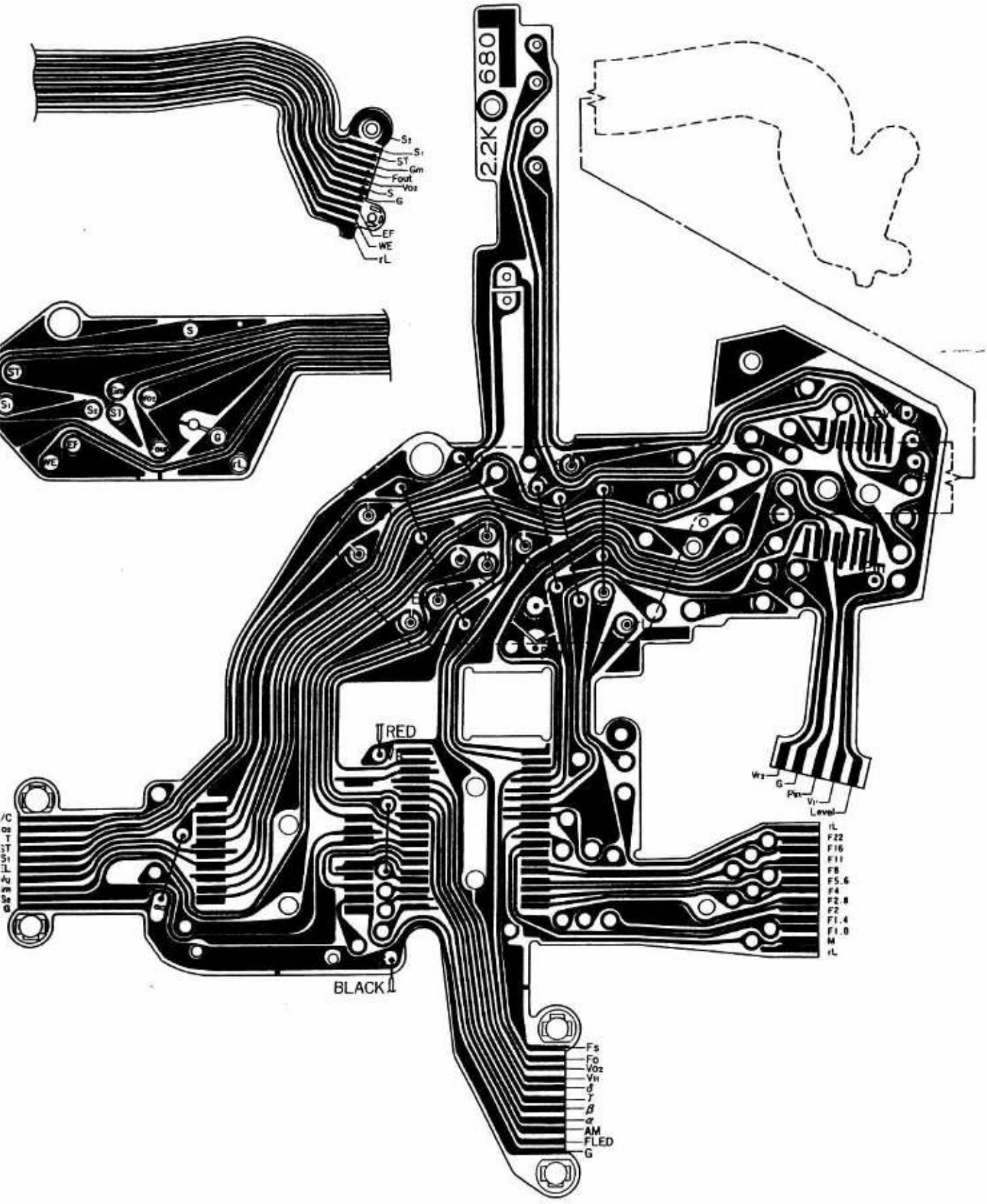
2.2K
680
S2
S1
ST
Gm
Fout
Voz
S
G
EF
WE
rL
RED
BLACK
Vr2
G
Pin
V1
Level
rL
F22
F16
F11
F8
F5.6
F4
F2.8
F2
F1.4
F1.0
M
rL
Fs
Fo
Voz
V11
δ
γ
β
α
AM
FLED
G

4 PATTERN ON HYBRID I.C

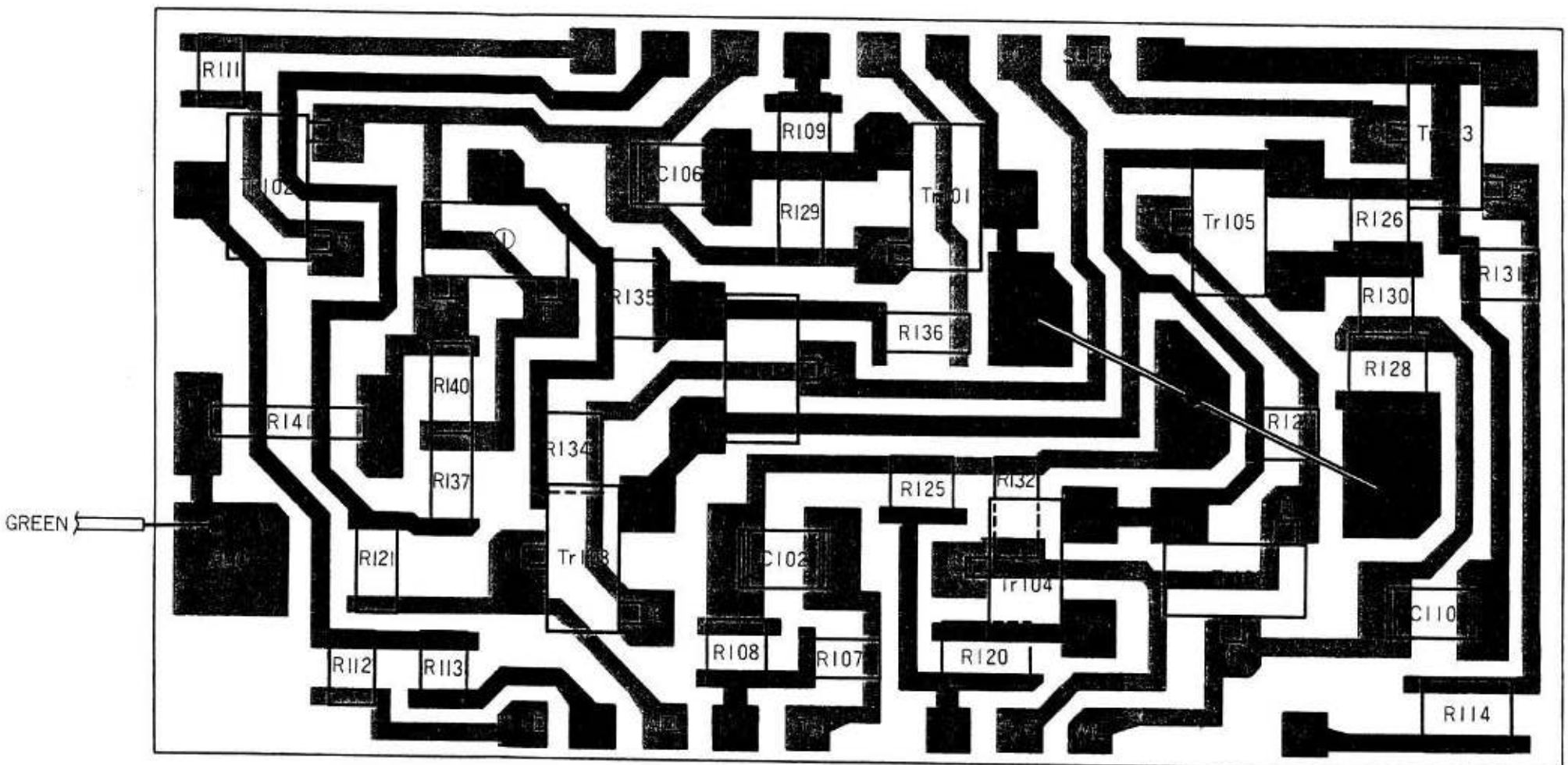

3-11-5 DESCRIPTION OF TERMINAL FUNCTION

Note D=Disconnection S=Short-circuit

Terminal name	Function	Problem
S1	Switch for AE-AMP power source	D: Cannot be released (not shown in view finder) S: View finder LED does not go off
VP	AE-AMP power source	D: Cannot be released (not shown in view finder) S: Cannot be released (abnormal power supply)
S2	Release switch	D: Cannot be released (shown in view finder) S: Operated with S1 at ON
WE	Returns AE-AMP to original position	D: Can be released once after battery case is installed S: Cannot be released (not shown in view finder)
VQ	When TR101 is turned on at same time as S1 L-level when S1 is on H-level when S1 is off	D: Cannot be released (not shown in view finder) S: View finder LED does not go off
Vr1	Produces fixed voltage (Vr2) of IC 16505	D: Vr2 adjustment cannot be made S: Vr2 adjustment cannot be made
Vr2	Basic voltage for AE-AMP	D: Sequence abnormal S: Sequence abnormal
Vr3	Fixed voltage for adjustment level	D: Increases of Fout voltage (F22 flickers) S: Increases of Fout voltage (F22 flickers)
VO2	Basic voltage for T, S, FO	D: Shutter speed is always "B" Abnormal view finder indicators (flicker of F1.0, F22, M) S: Shutter speed increases (more than normal) Abnormal view finder indicators (flicker of F1.0, F22, M)

Terminal name	Function	Problem
Level	Adjustment of light Meter-AMP level	D: Increases of Fout voltage (flicker of F22) * Variable resistance control level G is open (flicker of F1.0) S: Increases of Fout voltage (flicker of F22)
EF	Completion signal for auto-electronic flash charging	D: Does not go into EF mode S: 1/100 always, F5.6
AM	Conversion signal for auto, manual	D: Always AE S: Always manual
VB	Power source (Plus)	When contact or connection is loose, the circuit may be instable (the winding motor may sometimes turn over, etc.)
G	Power source (Minus)	Same as for VB
α	Release magnet signal	D: Mirror does not raise S: Mirror goes up
β	Diaphragm magnet signal	D: Aperture opens S: Always the smallest aperture
γ	Shutter lead blade magnet signal	D: Shutter does not open (shutter lead blade do not move) S: Shutter lead blade cannot be set
δ	Shutter rear blade magnet signal	D: Shutter remains open (shutter rear blade do not move) S: Mirror box motor continuance rotated
ST	Self mode transfer signal	D: Always self action S: Self action not possible
S	ASA-Data	D: Fout increases (flicker of F22) S: Fout decreases (flicker of F1.0)

Terminal name	Function	Problem
T	Shutter speed Data	D: Shutter speed is always "B" S: Shutter speed is faster than normal
Fo	F value opening Data	D: Fout increases (F22 flickers) (When F value resistence G is open, F1.0 and F22 flicker) S: Fout decreases (F1.0 flickers)
Pout	Light Data	D: Fout increases (F22 flickers) S: Fout increases (F22 flickers)
Pin	Light Data	Same as for Pout
Fout	Diaphragm Data	D: Flicker of F1.0 or F22 S: Flicker of F1.0 or F22
Fin	Diaphragm Data	Same as for Fout (when Fout and Fin are disconnected, there is a flicker of F1.0 or F22)
Adj1	Fout adjustment (not used)	D: Fout increases (F22 flickers) S: Fout decreases (F1.0 flickers)
Adj2	Same as for Adj1	Same as for Adj1
C	For A/D conversion	D: Either the light for F1.0 or F22 flickers, but not both at the same time S: Same as above
Ir	Same as for C	Same as for C
OS1	Basic frequency production	D: Cannot be released (not shown in view finder) S: Same as above
OS2	Same as for OS1	Same as for OS1
FS	Signal from F senser	D: Always smallest aperture S: Same as above

Terminal name	Function	Problem
FLED	Power source for F senser LED (simultaneously with β)	D: Always smallest aperture S: Same as above
SL	Signal for self-timer LED	D: Self LED does not light, but shutter works S: Same as above (damage to IC16523P)
Cex	For stabilizing IC 16505	D: Circuit instability (view finder indicators, shutter speed, etc.) S: Damage to IC16505
SLED	Self timer LED control signal	D: Self LED does not light, but shutter works S: Always self LED turned on or broken
AEL	AE lock control signal	D: Does not AE lock S: Always AE lock mode
S/C	Single, continues change signal	D: Always single mode S: Always continues mode

3-11-6 BASIC ADJUSTMENT OF AE AMPLIFIER

1. Preoperation

   a. Disconnect between Fin (IC16523P terminal 4) and Fout (IC16505 terminal 12) and solder lead wire so that voltage can be applied to Fin (IC16523P terminal 4) only.

   b. Apply supply voltage VB (about 6V) to the circuit from the battery case or FS checker (to turn on S1 only).

   C. Check if any adjustment is necessary via the procedures given in item 3 and 5 below.

2. Vr2 Adjustment

   Adjust R101 ... Adjustment of reference voltage of IC16523P, and light measuring amplifier.

   a. Apply 1.970 ±0.001V to Fin (IC16523P terminal 4) using either a regulated power supply or FS checker.

      * When Using FS Checker

         i) Set select knob (19) mounted on the checker panel to VO2'.

         ii) Connect a 3 to 100KΩ 3-terminal variable resistor or potentiometer between terminal C (20) and G (22) and apply voltage to intermediate terminal to Fin.

      Note: At the time of voltage application, GND position should be the same as the GND to which supply voltage is applied.

   b. Adjust R101 and set it to a point where F22 LED in the finder changes from steady lighting to blinking.

      Note 1) F22 does not light if R105 is not in a proper position, causing a change from steady lighting of LED to the blinking of F22. But this does not present any problem.

      Note 2) At that time, LED other than F22 goes out from lighting. So, make setting at the point where F22 blinks.

      Note 3) Since a point changing from steady lighting to the blinking of F22 is not definite, perflect ON-OFF blinking does not take place. Instead, cyclic (4Hz) bright/dim blinking is made.

      Note 4) Darken the finder to make LED easier to see.

3. Vr2 Adjustment Check Procedure

   a. Apply 1.960 ±0.001V to Fin (IC16523P terminal 4). When this is done, F22 LED must light.

   b. Check to ensure that F22 LED blinks when 1.980 ±0.001V is applied to Fin (IC16523P terminal 4).

4. Ir Adjustment

   Adjust R105 ... Adjustment of A/D Converter Circuit Tilt

   a. Apply 1.850 ±0.001V to Fin (IC16523P terminal 4).

   b. Adjust R105 and set it to a point where F16 and F22 LED light. (Reciprocal flashing)

5. Ir Adjustment Check Procedure

   a. Check to ensure that F16 LED light when 1.840 ±0.001V is applied to Fin (IC16523P terminal 4).

   b. Check to ensure that F22 LED lights when 1.860 ±0.001V is applied to Fin (IC16523P terminal 4).

6. VO2 (2.800V) Adjustment

   Adjust R119

   a. Connect T and ASA resistors and Fo (open F-value) resistor.

   b. Adjust R119 to obtain VO2 = 2.800 ±0.003V.

7. Level Adjustment

   Adjust R117

   a. Follow the AE adjusting method stated in the repair manual.

(THEORY OF ADJUSTMENT)

a. Adjustment of R105

Adjust A/D converter tilt

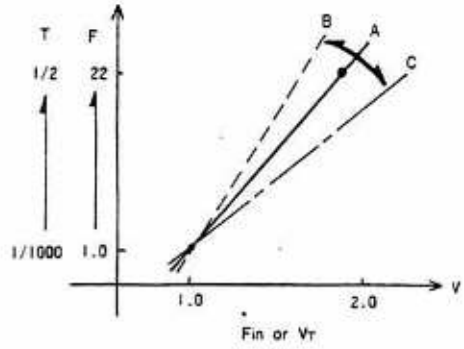

i) When Sliding Contact Piece of R105 Floating

As the impedance of R105 becomes large, the characteristics are shown by B in the figure above.

ii) For example, Actual aperture is made F8 or F16 as against F5.6 indication.

* Voltage of Fout and reference voltage (Vr2 or VO2) remains unchanged as a result of R105 adjustment.

b. Adjustment of R101

Adjust reference voltage set start voltage of A/D converter

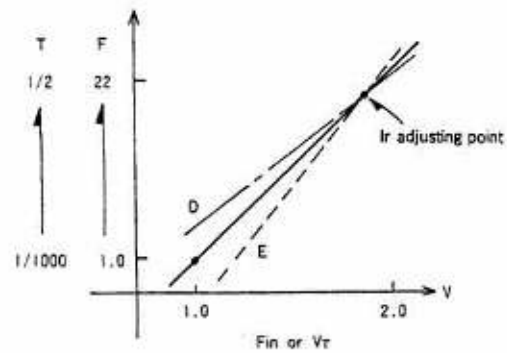

i) When Sliding Contact Piece of R101 Floating

Because the impedance of R101 becomes large, characteristics are shown by D in the above figure.

ii) For example, even when T dial is set for 2 sec, the speed is as fast as 1 sec or 1/2 sec.

* Fout voltage and reference voltage (Vr2 or VO2) remain unchanged as a result of R101 adjustment.

c. Aging Change of Resistor

i) It is almost unthinkable to cause failure of continuity or degradation of the sliding resistor by vibration, shock or aging.

ii) In the case of the sliding contact piece section, failure of continuity due to imperfect fastening or contact corrosion is conceivable.

iii) The rotating life is about 20 times.

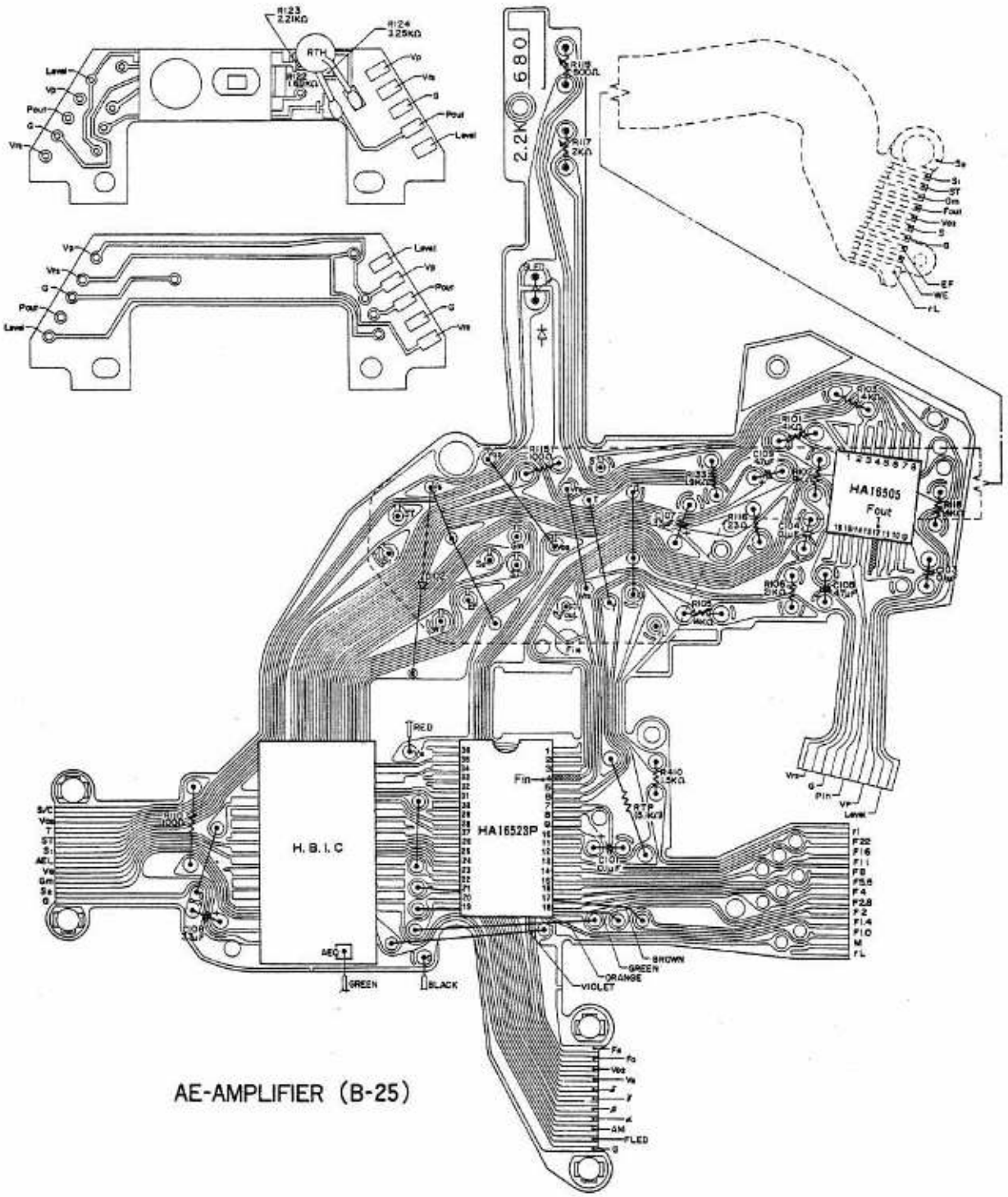

AE-AMPLIFIER (B-25)

3-12 MOTOR DRIVE AMPLIFIER

3-12-1 NAMES, FUNCTIONS AND VOLTAGE VALUES OF MAIN TERMINALS

TERMINALS ON MOTOR DRIVING AMPLIFIER

	Terminal name	Function	Voltage	Remark
1	V_B	Power source (Plus)	6 V	Battery voltage
2	Vcc	Motor driving amplifier power source	5.5~6	
3	Msw	ON/OFF switch signal for TR401	0	$M_{sw}=G_m$
4	Scs	Auto-loading switch signal	About 1.8	
5	S_{MM}	Mirror box motor control switch	6	
6	S_{WF}	Wind motor control switch	4.5~5	
7	Mmc	Mirror box motor driving relay terminal	6	
8	Mrc	Wind motor driving relay terminal	6	
9	Se	Film tension timer release signal	About 1.2	
10	WE	Wind end signal	0.7~1	Measured with S_1 turned on
11	rL	Finder LED control signal	0~1	
12	LED	Power source for film tension indicator LED	5.5~6	Same as in Vcc
13	C_1	Relay retaining signal	About 1.2	
14	C_4	Film tension timer (terminal for recharge of C403)	0	
15	RLY	Wind motor control signal	6	
16	PMP	Film tension indicator LED control signal	6	
17	G	Power source (minus)		

Note 1 : The aforementioned voltage values are given under the following conditions.

(a) Voltage of the power source is 6V.

(b) The camera is in the initial condition.

(c) The main switch is turned on.

(d) G and Msw are solded when the AE amplifier is disconnected.

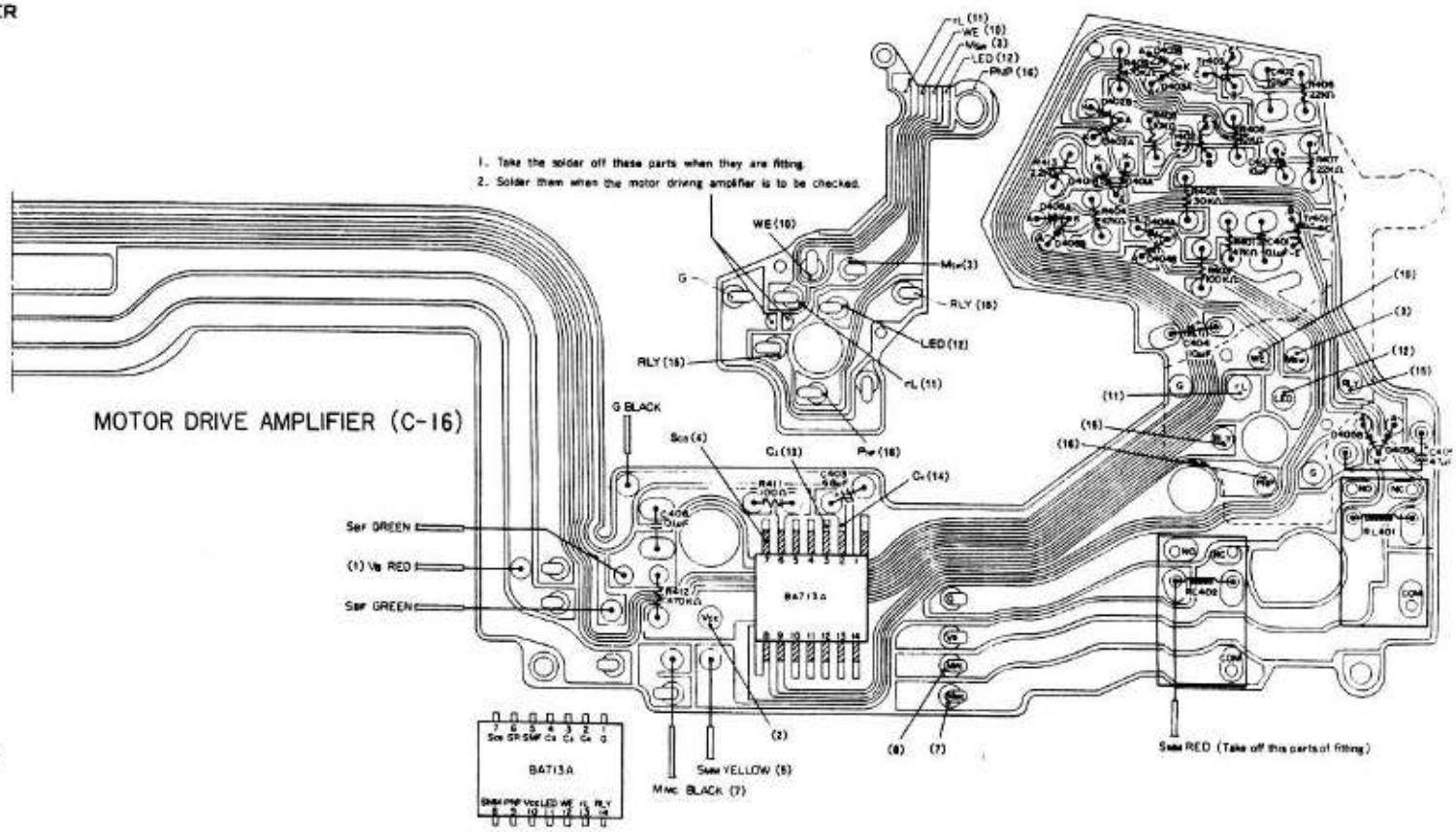

3-12-2 METHOD FOR SIMPLE CHECK ON MOTOR DRIVING AMPLIFIER

(1) Check on RL401 (Relay 401)

RLY (15) is grounded.

* The wind motor turns → RL401 is normal.
* The wind motor does not turn → RL401 is abnormal.

(2) Check on RL402 (relay 402)

S_{MM} (5) is grounded.

* The mirror box motor turns → RL402 is normal.
* The mirror box motor does not turn → RL402 is abnormal.

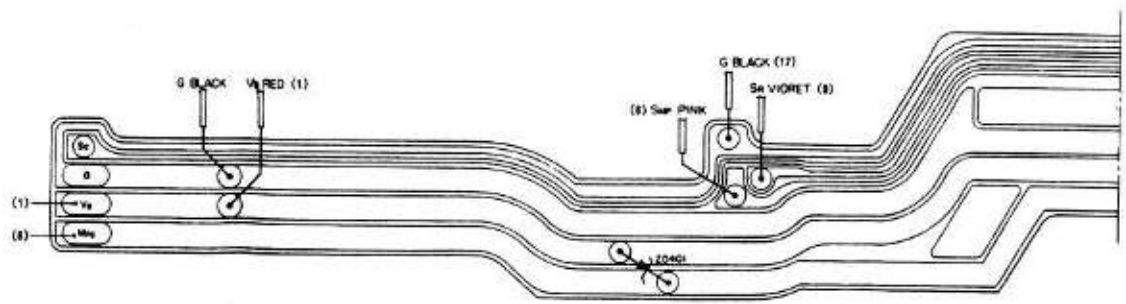

3-12-3 PATTERN ON MOTOR DRIVING AMPLIFIER

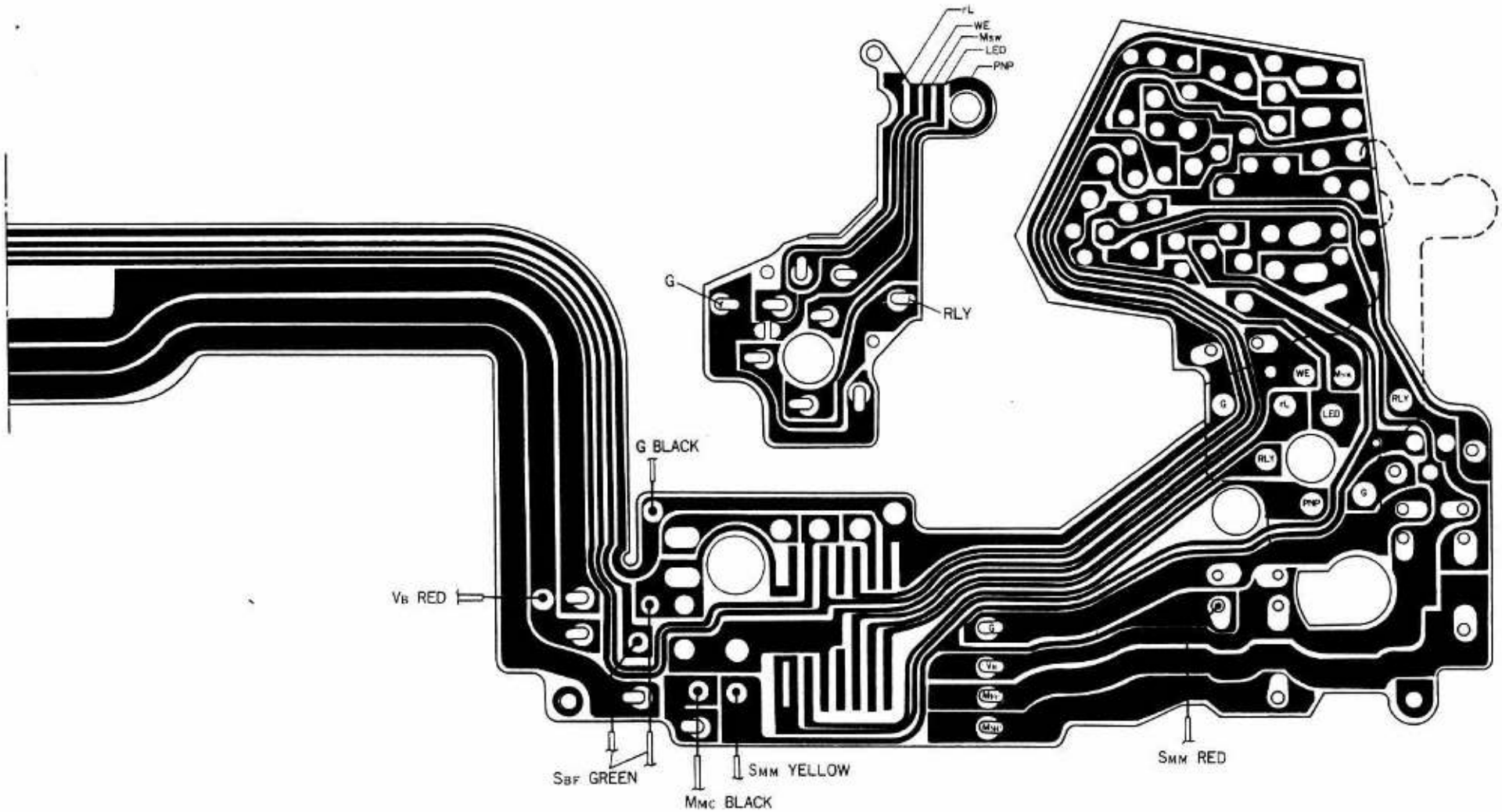

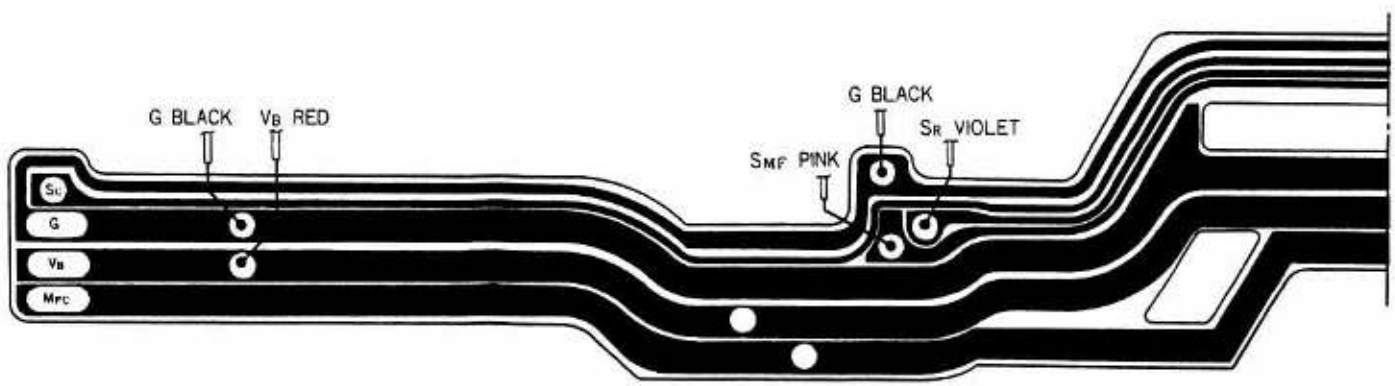

3-12-4 DESCRIPTION OF TERMINAL FUNCTION

Note D=Disconnection S=Short-circuit

Terminal name	Function	Problem
VB	Plus power source	Circuit is unsatble, for connection and contact are unstable.
G	Minus power source No.1 pin	Same as VB
VCC	Electric source for motor driving amplifier supplied by TR401 No.10 pin	D: Motor driving amplifier does not go into action S: Motor driving amplifier does not go into action (TR401 is damaged)
MSW	ON/OFF switch TR401 for VCC supply	D: Motor driving amplifier does not go into action S: Camera go to action with the main switch turned off
SC	Auto-loading switch 	D: Does not auto-loading S: Wind motor does not stop (with SBF turned on)
SBF	Connected in direct series with SC, this switch is turned on with the backlid closed and turned off with the backlid opened	D: Does not auto-loading S: Wind motor does not stop (with SC on)
SCB	Auto-loading signal (with SBF connected with Sc in direct series) SCB: No.7 pin	D: Does not auto-loading S: Wind motor does not stop
SMM	RL402 ON/OFF switch for control of mirror box motor SMM1 (rear plane switch) is connected with SMM2 in parallel	D: Mirror box motor does not turn S: Mirror box motor does not stop

Terminal name	Function	Problem
SMM	Mirror box motor switch detection terminal No.8 terminal	D: Wind motor does not turn S: Wind motor does not turn
SMF	Wind motor control switch Turned on when the wind starts and turned off when the film is wound by one frame	D: After the shutter is released (with S1 and S2 turned on) the mirror box charged, two or three frames wound and the wind motor stops and later the shutter is not released. S: With two or three frames wound after the loading of batteries, the wind motor stops and later the shutter is not released * With battery replace same operation repeated
SMF	Wind switch detection terminal No.5 pin	Same as SMF
MMC	Mirror box motor driving relay terminal	D: Mirror box motor does not turn S: Camera does not go into action (Extraordinary rundown of the batteries)
MFC	Wind motor driving relay terminal	D: Wind motor does not turn S: Camera does not go into action (Extraordinary rundown of the batteries)
SR	Turned on with the rewind button depressed for release of the tension timer SR: No.6 pin	D: Tension timer cannot be released S: Does not auto-loading
WE	Wind end signal No.12 pin	D: Can be one released after the loading of batteries S: Cannot be released
rL	View finder LED control signal No.13 pin	D: View finder LED cannot be switched on S: View finder LEDs are turned on with the wind motor in operation

Terminal name	Function	Problem
LED	Film tension LED power source	D: Film tension LED is not turned on S: Film tension LED is not turned on
C2	No.4 pin	Not in use
C3	Relay retaining signal No.3 pin Creation of time from the time SMM is turned off to the time when the SMF is turned on	D: (1) Wind motor does not go into action after the mirror box motor starts turning (2) Wind motor makes the first two or three revolution and then stops after the mirror box turns S: Wind motor makes the first two or three revolutions and stops after the mirror box motor turns
C4	Film tension timer No.2 pin	D: Wind motor does not turn S: Film tension cannot be detected (The film tension LED is not switched on)
PNP	Film tension indicator LED control signal No.9 pin	D: Tension indicator LED is not switched on S: Tension indicator LED is not switched on
LED	No.11 pin	Not in use
RLY	Wind motor control relay (RL401) action signal No.14 pin	D: Wind motor does not turn S: Wind motor does not stop

HOW TO REPAIR

77A

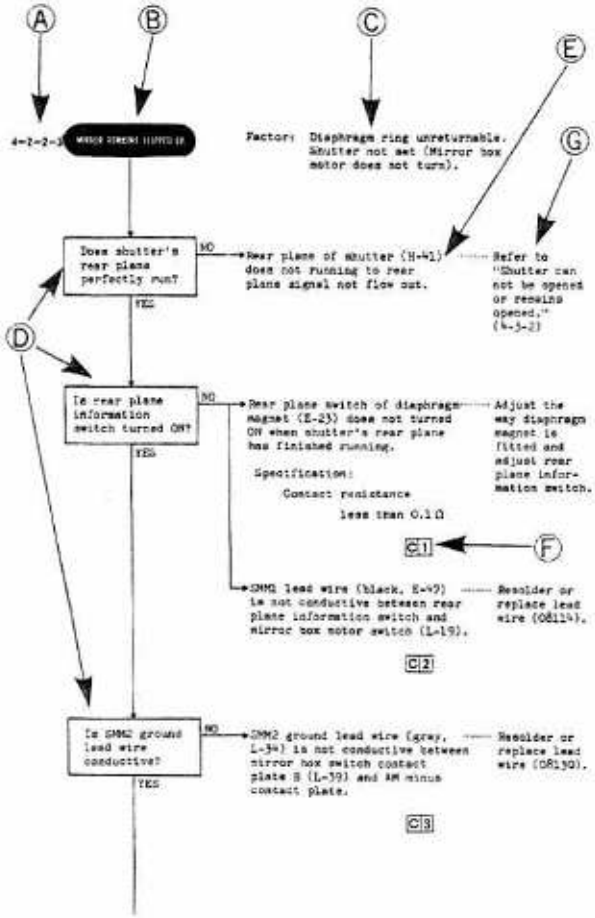

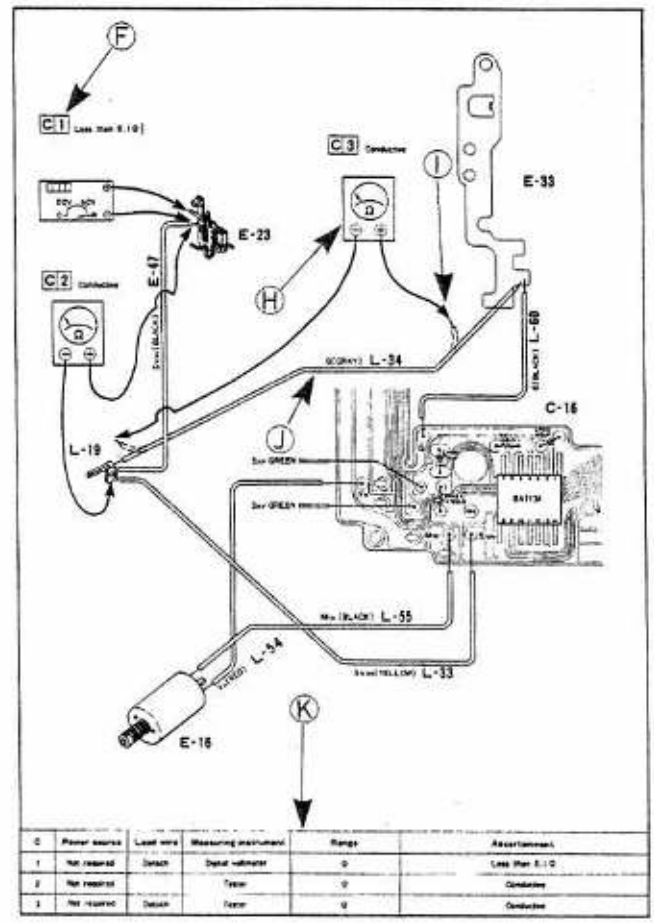

(A) Number of the defective item

(B) Defective item

(C) Places to be checked simultaneously with the check of the defective items.

Even for one and the same defective item, the reason differs, depending on the way in which other mechanisms stop.

Select items with the camera stopped.

(D) Order of checks

On each check item, check according to the instructions "yes" or "no".

(E) Cause to malfunction

Substance of check and specifications

(F) Check numbers

The numbers in the sentences correspond to those in the figures, and what kind of check is necessary is illustrated.

On the right-hand side of each check number in a figure, the specification value or the substance of a check is indicated.

(G) Repair method

(H) Instruments used

(Tester)

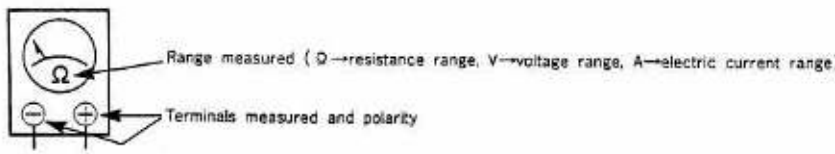

Note: When the tester is set to the resistance range, make sure that the voltage at the terminals of the test pole is less than 4V before the tester is used.

(Digital multimeter)

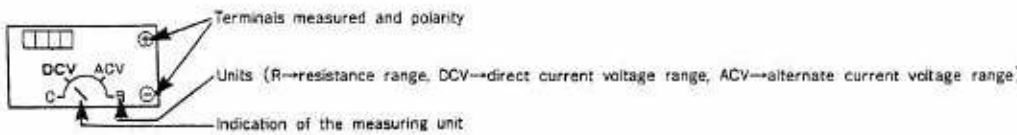

(Oscilloscope)

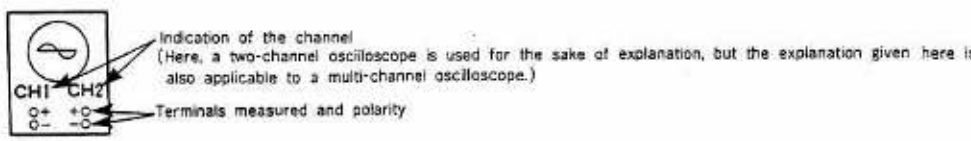

Note: The voltage, time and probe indicated in the figure are examples. The values may be selected, depending on the oscilloscope available, but for the probe, it is advisable to use 10 : 1 with a high impedence.

(FS checker or pulse counter)

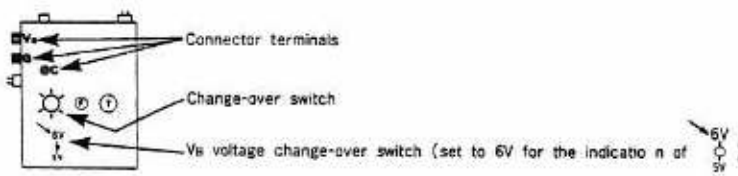

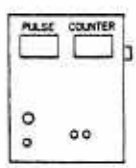

(Regulated D.C power sopply)

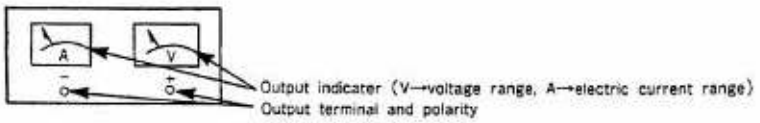

(I) Places of measurement and check

(J) Parts for measurement and check

(K) List of measurements and checks

C	Power source	Lead wire	Measuring instrument	Range	Ascertainment
1	Not required		Tester	Ω	Not short-circuited
2	Required (6V)	Detach	Digital multimeter	V	Less than 0.1V
3	Not required	Detach	FS checker	2.8V	T=4V±10mV (1/60)
ⓐ	ⓑ	ⓒ	ⓓ	ⓔ	ⓕ

(a) Check number

The check numbers in the figures correspond to those in the sentences.

(b) Use of power source and voltage

Not required ----- Measure with the battery cells detached from the camera.

Required (6V) ---- Use battery cells or a constant voltage power source and add voltage to the camera.

(c) Handling of lead wires

No entries ----- Do not detach the lead wires and measure with the camera placed in a normal condition.

Detach ----- Detach the lead wires (indicated in the figute) and measure.

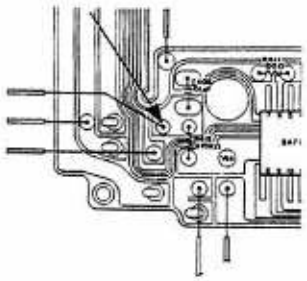

1) Measure or check while the lead wires remain soldered.

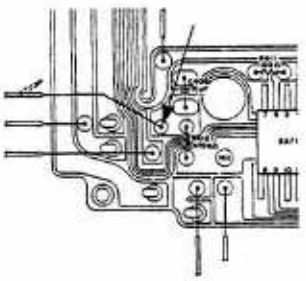

2) Detach the lead wires from the soldered parts and measure or check the printed circuit board (switch).

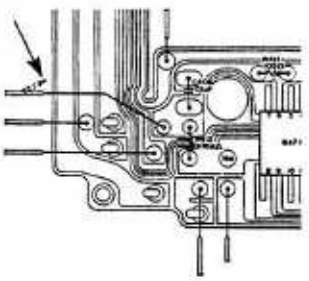

3) Detach the lead wires from the soldered part and measure or check the tip of the wires.

(d) Measuring instruments used

(e) Established units of measuring instruments used

Ω ..... measurement of resistance

V ..... measurement of voltage

A ..... measurement of electric current

6V or 2.8V ..... established voltage of the FS checker

(f) Items ascertained or values measured (specified values)

CARE FOR HANDLING OF ELECTRONIC PARTS

POINTS TO BE NOTED ABOUT ELECTRONIC PARTS

In handling electronic parts --- particularly, semiconductor parts (ex; transitors, diodes, ICs, hybrid ICs, etc.), pay full heed to the following points in respect of themethod in which they are carried around, measurement and repair to see to it that.

(1) There will be no influences from static electricity, noise (*1), surge voltage, etc.;

(2) There will be no influences from heat and mechanical shocks (*2), such as by soldering;

(3) There will be no environmental influences, such as those of temperature and humidity.

*1 Unnecessary electricity which producs an adverse impact on electric parts from the outside. The noise which is instantaneously generated --- for example, when the motor is started --- is known as surge voltage.

*2 Inward distortion or unnecessary pressure which is caused when the supports of electric parts are bent.

1. CARE FOR STORING

a. For storing, select a container which is not readily affected by static electricity (conductive containers, aluminum foil, etc.). Pack with aluminum foil and store the AE amplifier and motor driving amplifier, in particular.

b. Make sure that there will be no loads on electronic parts when they are in store.

c. The places where parts are in store must be free from sudden changes in temperature, formation of water drops and toxic gas, dust, etc.

2. CARE FOR TRANSPORT

a. Containers for the transport of parts must be free from the charge of electricity and the generation of static electricity, as caused by vibration during the transport (ex: conductive containers, aluminum foil, etc.).

b. During the transport, minimize mechanical vibration or shock and see to it that the parts are not affected by excessive power.

3. CARE FOR MEASUREMENT AND REPAIR

◎ When parts are carried around or in store, make sure that they are wrapped up with aluminum foil. The electric potential is the same between the terminals of the IC and printed electric circuit and it is possible to prevent destruction by static electricity.

When parts are measured or built in, all the terminals are open, so that care must be exercised about the possibility of electronic parts being destroyed by static electricity from human bodies, measuring instruments, work tables, soldering irons, etc., or by electric leakage.

◎ The charge of electricity by human bodies and clothing is greatly changed by clothing, footwear, physical constitution, peripheral temperature and humidity. Special care must be exercised particularly when it is dry.

(Reference data)

Peripheral temperature	20°C
Relative humidity	40%
Charge of electricity by human body and clothing	400 ~ 13,000V

a. To prevent destruction by static electricity charged to a human body or clothing, discharge static electricity with the human body earthed by means of a high resistor or with an earth wire or an earthed conductive rubber sheet to the work table.
This step is necessary, depending on the environmental conditions.

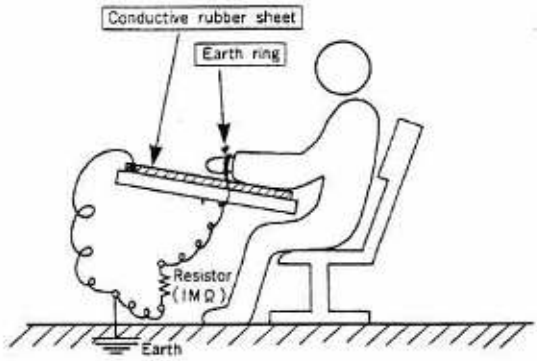

b. To prevent destruction by noise from the soldering iron or electric leakage, use a low voltage soldering iron or an earthed soldering iron. Make a periodical check to see to it that there is no electric leakage.

(For electric leakage, check the insulation between the tip of the soldering iron and the heater.)

c. When ICs or hybrid ICs are soldered or the lead wires in their neighborhood are soldered, shorten the work time to prevent a sudden, high heat on the ICs or hybrid ICs and see to it that the temperature of the soldering iron does not become unnecessarily high.

(Example)

270°C less than about 10 seconds

ELECTRICAL PARTS CHECK METHOD

1. Condenser Check

   a. Remove the condenser from the printed circuit bord and allow both terminals to be shorted for discharge.

   b. Set the tester to the resistance range (magnification factor to maximum).

   c. The condenser will not be defective if it momentarily shows low impedance, gradually making it ∞, when the black side (⊖ side) of the tester probe to connected to the ⊕ terminal of the condenser and its red side (⊕ side) to the ⊖ terminal.
   When mispolarization is made, or when the condenser is defective, an impedance value other than ∞ is shown.

   Note 1) When measuring condensers (tantulum condenser, aluminum electrolytic condenser, etc.), be certain to avoid mispolarization.

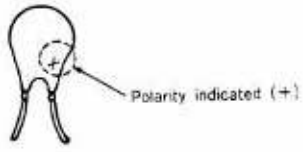

   Note 2) Before check, necessarily short the terminal of the condenser for dischage.

   Note 3) When the tester is set to the resistance range, plus voltage is generated from the black side (⊖ side) of the tester probe, and minus voltage from its red side (⊕ side). Also, when the ran e is set to magnification, large current flows.

2. Transistor Check

   i) PnP Transistor

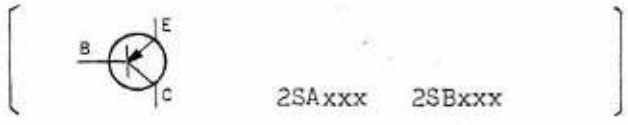

   a. Remove the transistor from the printed circuit bord.

   b. Set the tester to the resistance range.

   c. Connect the red side (⊕ side) of the tester probe to the base terminal (B) of the transistor and its black side (⊖ side) to the collector terminal (C) or emitter terminal (E) to verify electrical continuity.

d. In the connecting methods other than that in item b, check to ensure that no electrical continuity is established.

ii) nPn Transistor

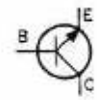

2SCxxx 2SDxxx

a. Remove the transistor from the printed circuit bord.

b. Set the tester to the resistance range.

c. Connect the black side (⊖ side) of the tester probe to the base terminal (B) of the transistor and its red side (⊕ side) to the collector terminal (C) or emitter terminal (E) to verify electrical continuity.

d. In the connecting methods other than that in item b, check to ensure that no electrical continuity is established.

iii) Transistor Polarity

a. Transistors are available in two types below:

Type	PnP	nPn
Symbol	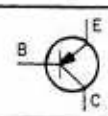	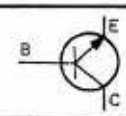
Name	2SAxxx 2SBxxx	2SCxxx 2SDxxx

b. Polarity

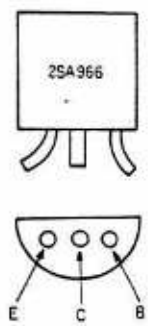

(BOTTOM VIEW)

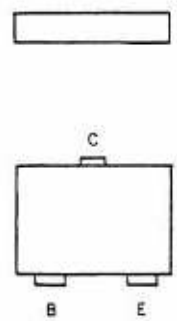

(TOP VIEW)

3. Diode Check

a. Remove the diode from the printed circuit bord.

b. Set the tester to the resistance range.

c. Connect the black side (⊖ side) of the tester probe to the anode terminal (A) of the diode and red side (⊕ side) to the cathode terminal (C) to verify electrical continuity.

d. In the connecting method other than that in item C, check to ensure that no electrical continuity is established.

(Polarity)

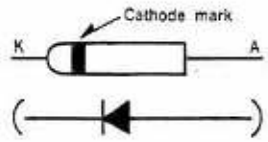

4. Impedance Measurement and Continuity Check

a. Set the tester to the resistance range.

b. Remove the batteries from the camera and make necessary measurement.

c. Check with either the resistor or pattern open.

5. Flexible Printed Circuit Board Check

a. Check electrical continuity.

b. Visually check.

When the pattern is seen from the back side through a light, a disconnected portion appears white if the pattern is disconnected.

4. HOW TO REPAIR

4-1 FILM WIND

4-1-1 AUTO-LOADING SYSTEM DOES NOT OPERATE

Is voltage at the terminals of the motor driving amplifier is normal condition?

- NO → VB terminal of motor drive amplifier (C-16) is improperly connected with body battery contact plate A (G-1). ····· Resolder.

  Specification: VB ≒ 6V

  C 1

- YES ↓

Is film counter switch turned ON?

- NO →
  - When backlid (A-7) has been opened, index mark in film counter window (I-32) does not conform to "S" on scale plate (H-6). ····· Refer to "Film counter unreturnable to original position." (4-6-1)
  - When film counter returns to original position, film counter is not brought into contact with earth pin (H-23) because of protrusion of film counter plate. ····· Clean or adjust switch.

    Specification:

    Contact resistance

    less than 0.1 Ω

    C 2
  - Film counter lead wire (white, H-13) is snapped off. ····· Resolder or replace lead wire (08101).

    C 3
- YES ↓

Are lock claw switches turned ON?

- NO → Neither lock claw switch plate B (M-55) nor lock claw switch plate A (M-57) is turned ON even when backlid has been closed. ····· Adjust.

  Specification:

  Contact resistance

  less than 0.1 Ω

  C 4
- YES ↓

→ Lock claw switch's lead wire (yellow-green, M-45) is snapped off. ····· Resolder or replace lead wire (08105).

→ Short-circuited between body (F-35) and lock claw switch plate A. ····· Adjust.

Is film rewind switch turned OFF?

NO →

→ Sprocket shaft (C-17) does not return to original position. ····· Refer to "Rewind button unreturnable to original position." (4-9-1)

→ Rewind switch plate (G-65) is turned ON even when sprocket shaft has been without depressed. ····· Adjust.

→ Short-circuited between rewind switch plate or rewind switch plate's lead wire (violet, G-32) and ground. ····· Adjust or replace lead wire (08104).

C 5

YES ↓

Does film wind motor smoothly rotate?

NO →

→ Detach MFC of motor drive amplifier (C-16) from wind motor contact plate A (G-4) and check resistance between wind motor contact plate A and VB. ····· Clean wind motor and motor base plate sub-assembly or replace wind motor sub-assembly (201).

Specification: RMF = 1 ~ 5 Ω

C 6

→ Detach MFC of motor drive amplifier from wind motor contact plate A. Wind motor does not revolve when wind motor contact plate A is grounded. ····· Replace wind motor sub-assembly (201).

C 7

YES ↓

Condition

- Battery voltage must be 6V.
- Backlid must be closed after once opening it.
- Camera must be in initial state.
- Mount only the lens.
- Set lens aperture to AE.
- Do not load film in.
- Shutter speed 1/60 sec.
- Film speed ASA 100.
- Make inspection in a place where light is sufficiently high in intensity.
- Make in single frame advance mode

Symbol

S_1	AE AMP power source switch.	S_{BF}	Tightening claw switch signal.	V_{O2}	Resistance applied voltage.
S_2	Release switch.	S_{MM}	M.B motor switch signal.	G	Ground.
S_T	Self-timer mode switch.	S_{MM1}	Rear blade infomation switch.	M_{M}	M.B motor.
SL	Self-timer LED signal.	S_{MM2}	M.B motor switch.	M_F	Wind motor.
AM	Auto manual signal.	S_{MF}	Wind motor switch signal.	Mg	Mgnet.
EF	Electric flash charge completed signal.	T	Shutter speed signal.	LED	Light emitting diode.
α	Release Mg signal.	S	ASA signal.	SW	Switch.
β	Aperture Mg signal.	FS	F-sensor output signal.	B	Bolb.
γ	Lead blade Mg signal.	F_O	Open F-value signal.	OPEN	Disconnected, no signal.
δ	Rear blade Mg signal.	F_{OUT}	Proper aperture data.	MB	Mirror box.
WE	Winder end signal.	V_B	Battery voltage.	F	Aperture.
Sc	Counter switch signal.	V_P	IC supply voltage.	IC	Integrted circuit.
S_R	Rewind switch signal.	rL	Viewfinder LED control signal.		

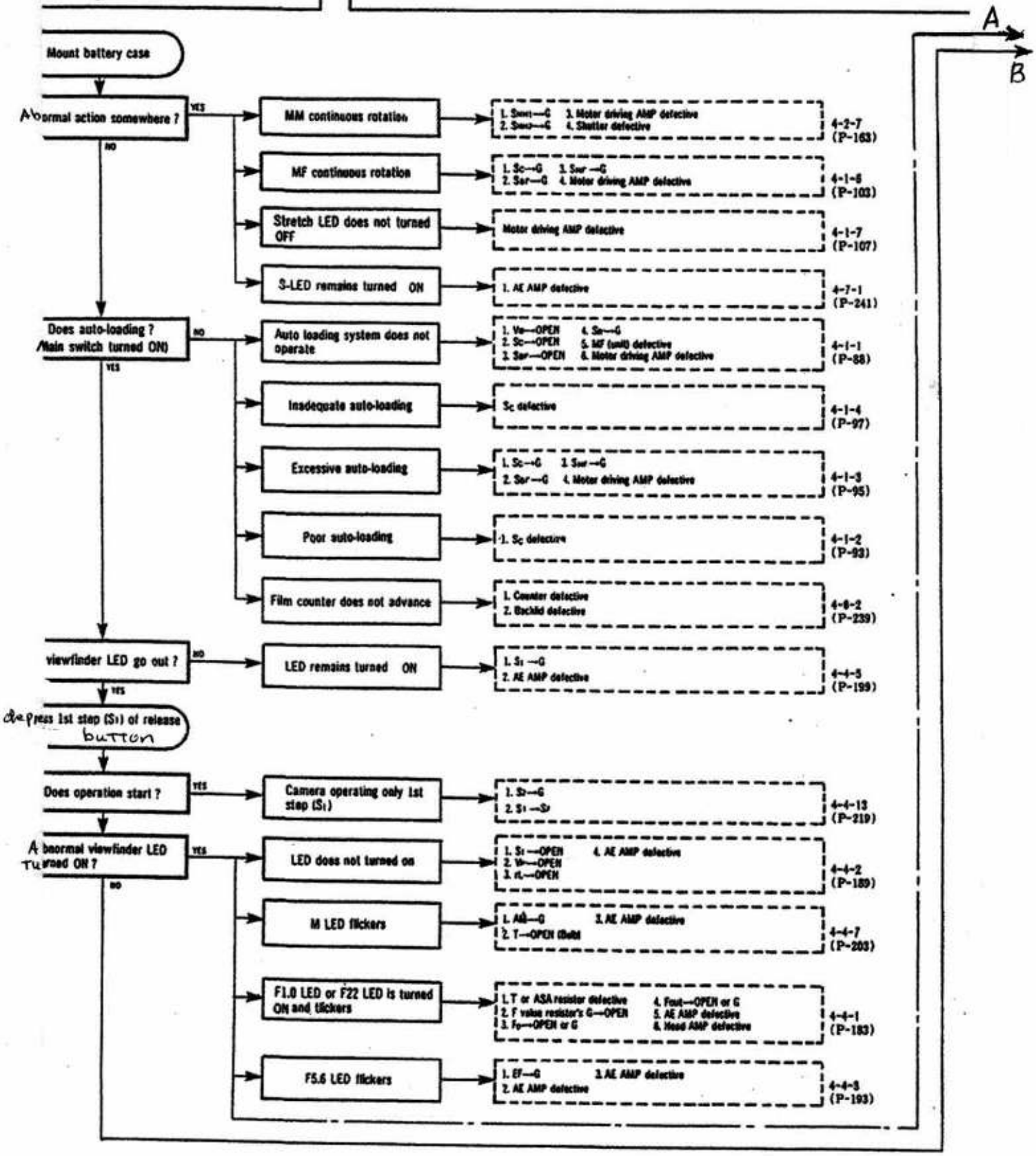

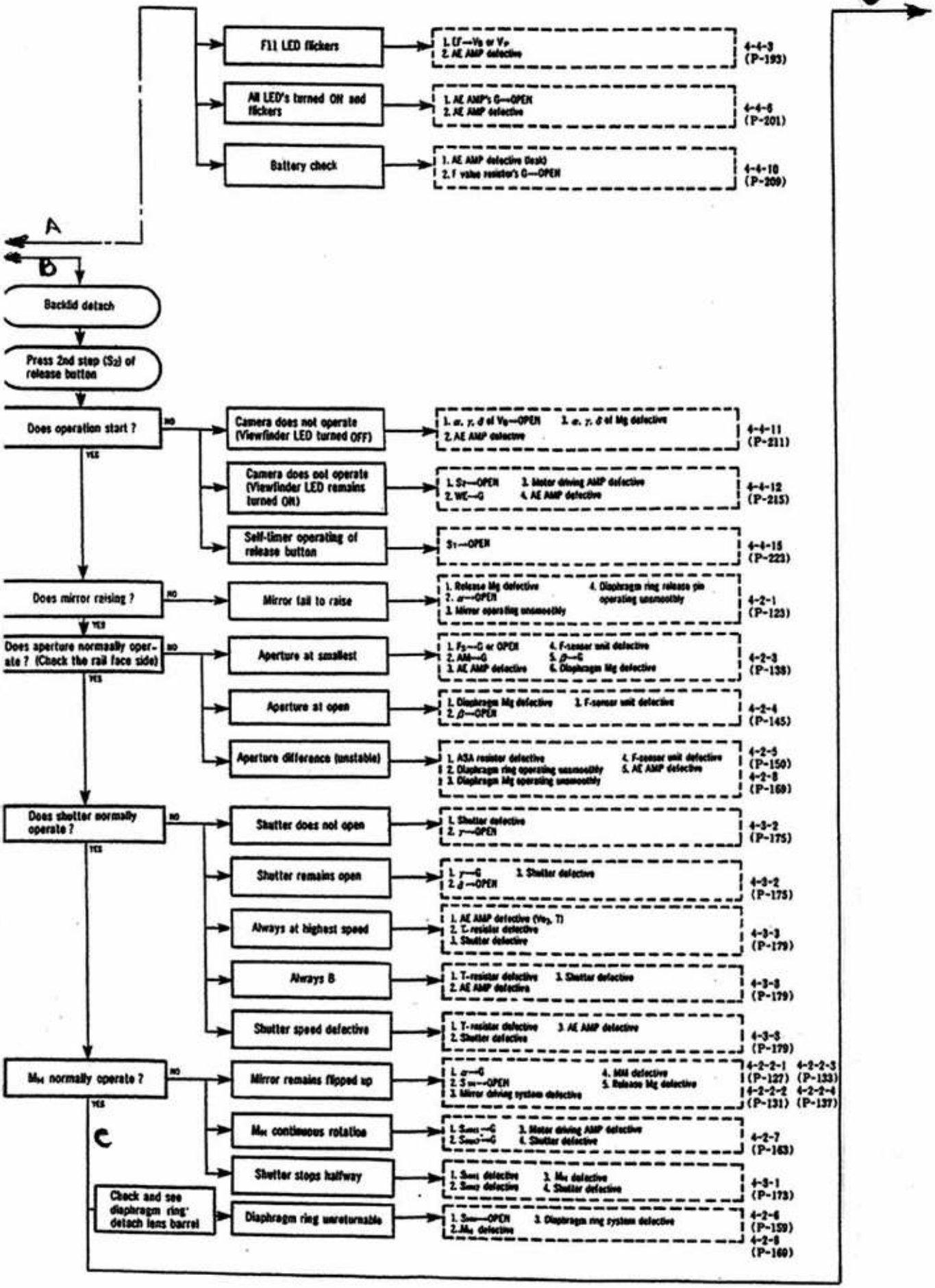
C
F11 LED flickers
1. LF—V_B or V_F
2. AE AMP defective
4-4-3 (P-193)
All LED's turned ON and flickers
1. AE AMP's G—OPEN
2. AE AMP defective
4-4-6 (P-201)
Battery check
1. AE AMP defective Desk)
2. F value resistor's G—OPEN
4-4-10 (P-209)
A
B
Backlid detach
Press 2nd step (S2) of release button
Does operation start ?
NO
YES
Camera does not operate (Viewfinder LED turned OFF)
1. α, γ, δ of V_B—OPEN
2. AE AMP defective
3. α, γ, δ of Mg defective
4-4-11 (P-211)
Camera does not operate (Viewfinder LED remains turned ON)
1. S2—OPEN
2. WE—G
3. Motor driving AMP defective
4. AE AMP defective
4-4-12 (P-215)
Self-timer operating of release button
S1—OPEN
4-4-15 (P-223)
Does mirror raising ?
NO
YES
Mirror fail to raise
1. Release Mg defective
2. α—OPEN
3. Mirror operating unsmoothly
4. Diaphragm ring release pin operating unsmoothly
4-2-1 (P-123)
Does aperture normally operate ? (Check the rail face side)
NO
YES
Aperture at smallest
1. F2—G or OPEN
2. AM—G
3. AE AMP defective
4. F-sensor unit defective
5. β—G
6. Diaphragm Mg defective
4-2-3 (P-138)
Aperture at open
1. Diaphragm Mg defective
2. β—OPEN
3. F-sensor unit defective
4-2-4 (P-145)
Aperture difference (unstable)
1. ASA resistor defective
2. Diaphragm ring operating unsmoothly
3. Diaphragm Mg operating unsmoothly
4. F-sensor unit defective
5. AE AMP defective
4-2-5 (P-150)
4-2-8 (P-169)
Does shutter normally operate ?
NO
YES
Shutter does not open
1. Shutter defective
2. γ—OPEN
4-3-2 (P-175)
Shutter remains open
1. γ—G
2. δ—OPEN
3. Shutter defective
4-3-2 (P-175)
Always at highest speed
1. AE AMP defective (V_B, T)
2. T-resistor defective
3. Shutter defective
4-3-3 (P-179)
Always B
1. T-resistor defective
2. AE AMP defective
3. Shutter defective
4-3-3 (P-179)
Shutter speed defective
1. T-resistor defective
2. Shutter defective
3. AE AMP defective
4-3-3 (P-179)
M_M normally operate ?
NO
YES
Mirror remains flipped up
1. α—G
2. S_M—OPEN
3. Mirror driving system defective
4. MM defective
5. Release Mg defective
4-2-2-1 (P-127) 4-2-2-3 (P-133)
4-2-2-2 (P-131) 4-2-2-4 (P-137)
M_M continuous rotation
1. S_MM1—G
2. S_MM2—G
3. Motor driving AMP defective
4. Shutter defective
4-2-7 (P-163)
Shutter stops halfway
1. S_MM1 defective
2. S_MM2 defective
3. M_M defective
4. Shutter defective
4-3-1 (P-173)
Check and see diaphragm ring detach lens barrel
Diaphragm ring unreturnable
1. S_MM—OPEN
2. M_M defective
3. Diaphragm ring system defective
4-2-6 (P-159)
4-2-8 (P-160)

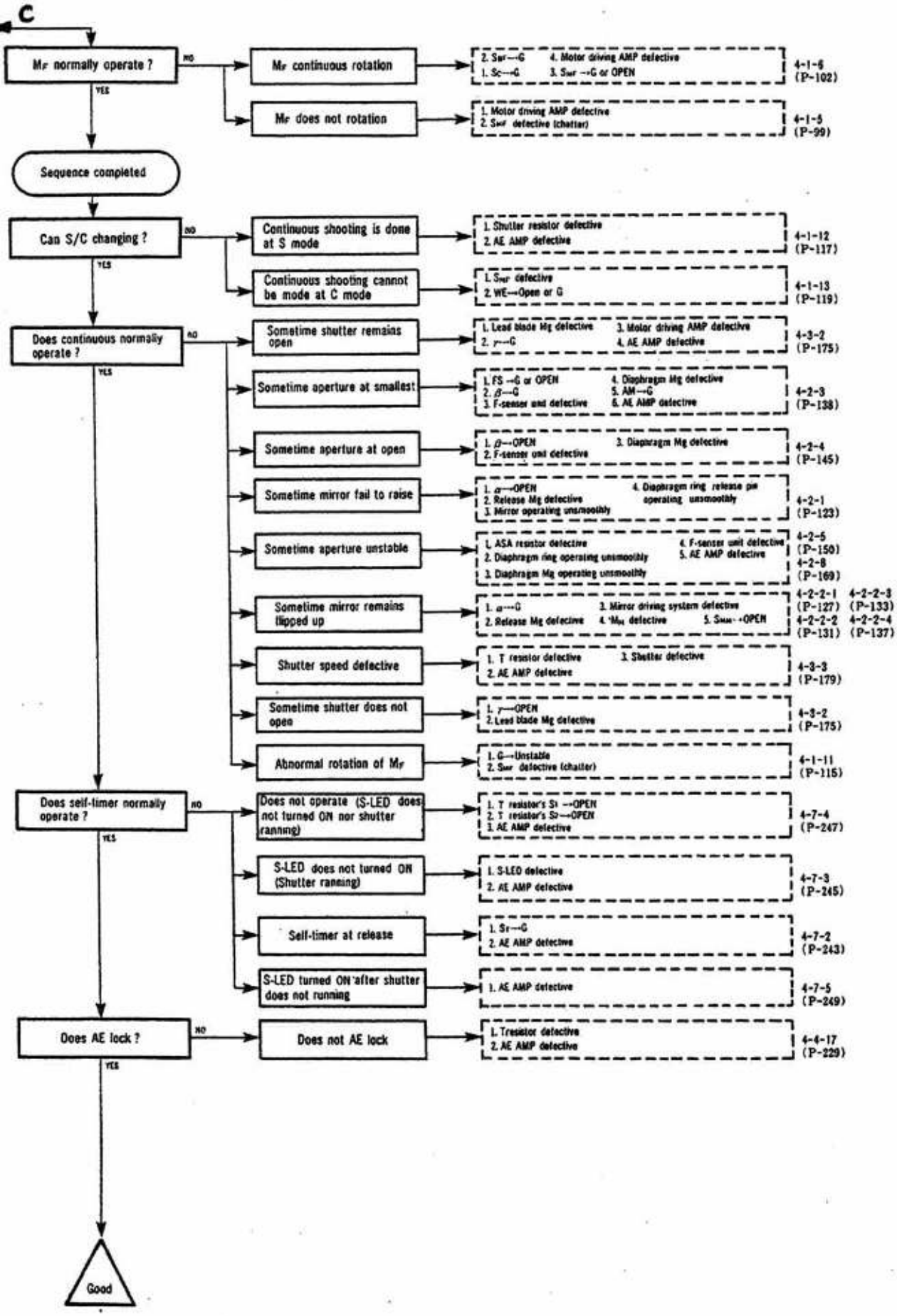
C
Mr normally operate ?
NO
YES
Mr continuous rotation
2. Sw→G 4. Motor driving AMP defective
1. Sc→G 3. Swr →G or OPEN
4-1-6 (P-102)
Mr does not rotation
1. Motor driving AMP defective
2. Swr defective (chatter)
4-1-5 (P-99)
Sequence completed
Can S/C changing ?
NO
YES
Continuous shooting is done at S mode
1. Shutter resistor defective
2. AE AMP defective
4-1-12 (P-117)
Continuous shooting cannot be mode at C mode
1. Swr defective
2. WE→Open or G
4-1-13 (P-119)
Does continuous normally operate ?
NO
YES
Sometime shutter remains open
1. Lead blade Mg defective 3. Motor driving AMP defective
2. γ→G 4. AE AMP defective
4-3-2 (P-175)
Sometime aperture at smallest
1. FS →G or OPEN 4. Diaphragm Mg defective
2. β→G 5. AM→G
3. F-sensor unit defective 6. AE AMP defective
4-2-3 (P-138)
Sometime aperture at open
1. β→OPEN 3. Diaphragm Mg defective
2. F-sensor unit defective
4-2-4 (P-145)
Sometime mirror fail to raise
1. α→OPEN 4. Diaphragm ring release pin operating unsmoothly
2. Release Mg defective
3. Mirror operating unsmoothly
4-2-1 (P-123)
Sometime aperture unstable
1. ASA resistor defective 4. F-sensor unit defective
2. Diaphragm ring operating unsmoothly 5. AE AMP defective
3. Diaphragm Mg operating unsmoothly
4-2-5 (P-150)
4-2-8 (P-169)
Sometime mirror remains flipped up
1. α→G 3. Mirror driving system defective
2. Release Mg defective 4. Mu defective 5. Swr→OPEN
4-2-2-1 (P-127) 4-2-2-3 (P-133)
4-2-2-2 (P-131) 4-2-2-4 (P-137)
Shutter speed defective
1. T resistor defective 3. Shutter defective
2. AE AMP defective
4-3-3 (P-179)
Sometime shutter does not open
1. γ→OPEN
2. Lead blade Mg defective
4-3-2 (P-175)
Abnormal rotation of Mr
1. G→Unstable
2. Swr defective (chatter)
4-1-11 (P-115)
Does self-timer normally operate ?
NO
YES
Does not operate (S-LED does not turned ON nor shutter running)
1. T resistor's St →OPEN
2. T resistor's St→OPEN
3. AE AMP defective
4-7-4 (P-247)
S-LED does not turned ON (Shutter running)
1. S-LED defective
2. AE AMP defective
4-7-3 (P-245)
Self-timer at release
1. St→G
2. AE AMP defective
4-7-2 (P-243)
S-LED turned ON after shutter does not running
1. AE AMP defective
4-7-5 (P-249)
Does AE lock ?
NO
YES
Does not AE lock
1. Tresistor defective
2. AE AMP defective
4-4-17 (P-229)
Good

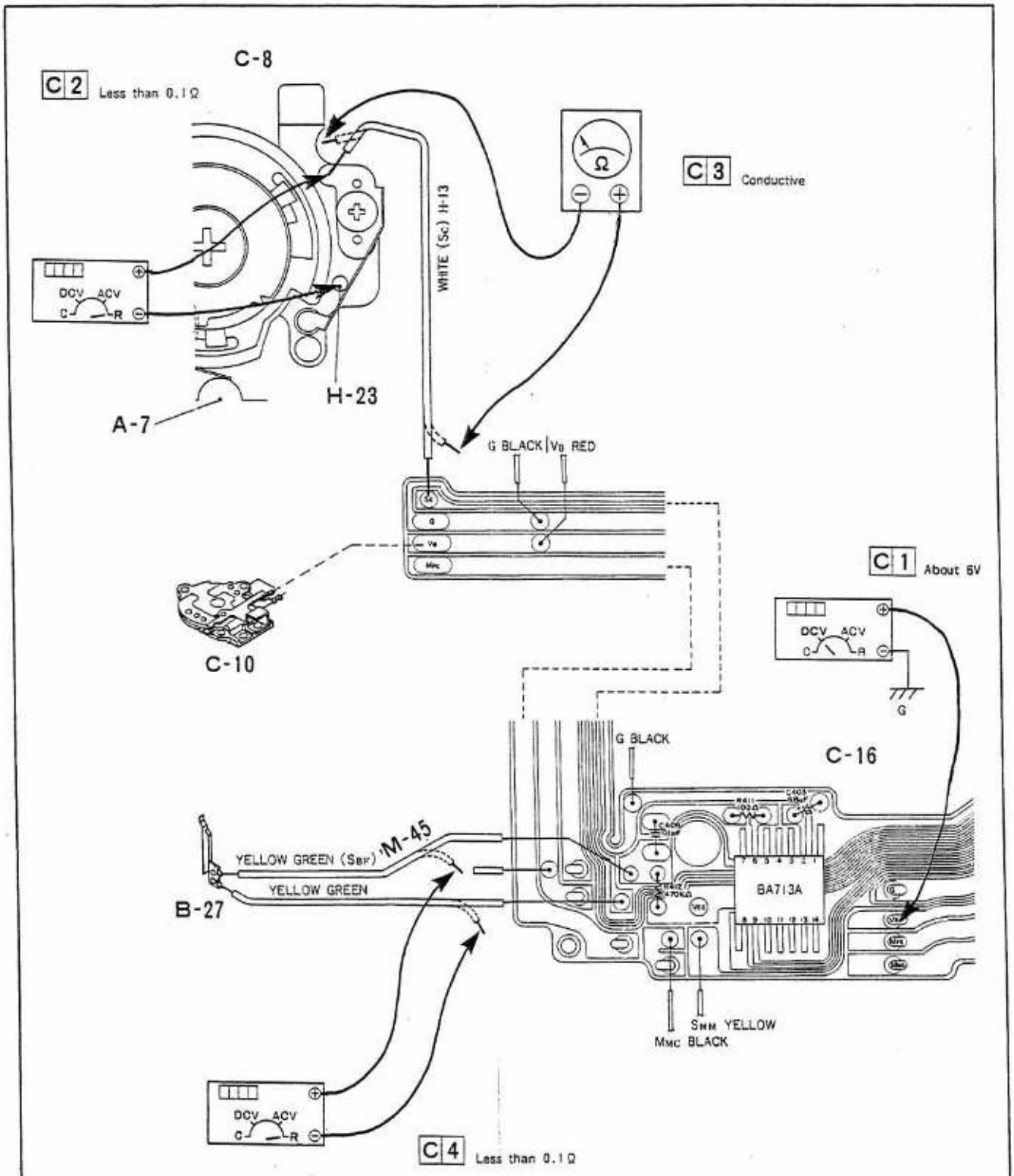

C	Power source	Lead wire	Measuring instrument	Range	Ascertainment
1	Required (6V)		Digital voltmeter	V	About 6V
2	Not required	Detach	Digital voltmeter	Ω	Less than 0.1 Ω
3	Not required	Detach	Tester	Ω	Conductive
4	Not required	Detach	Digital voltmeter	Ω	Less than 0.1 Ω

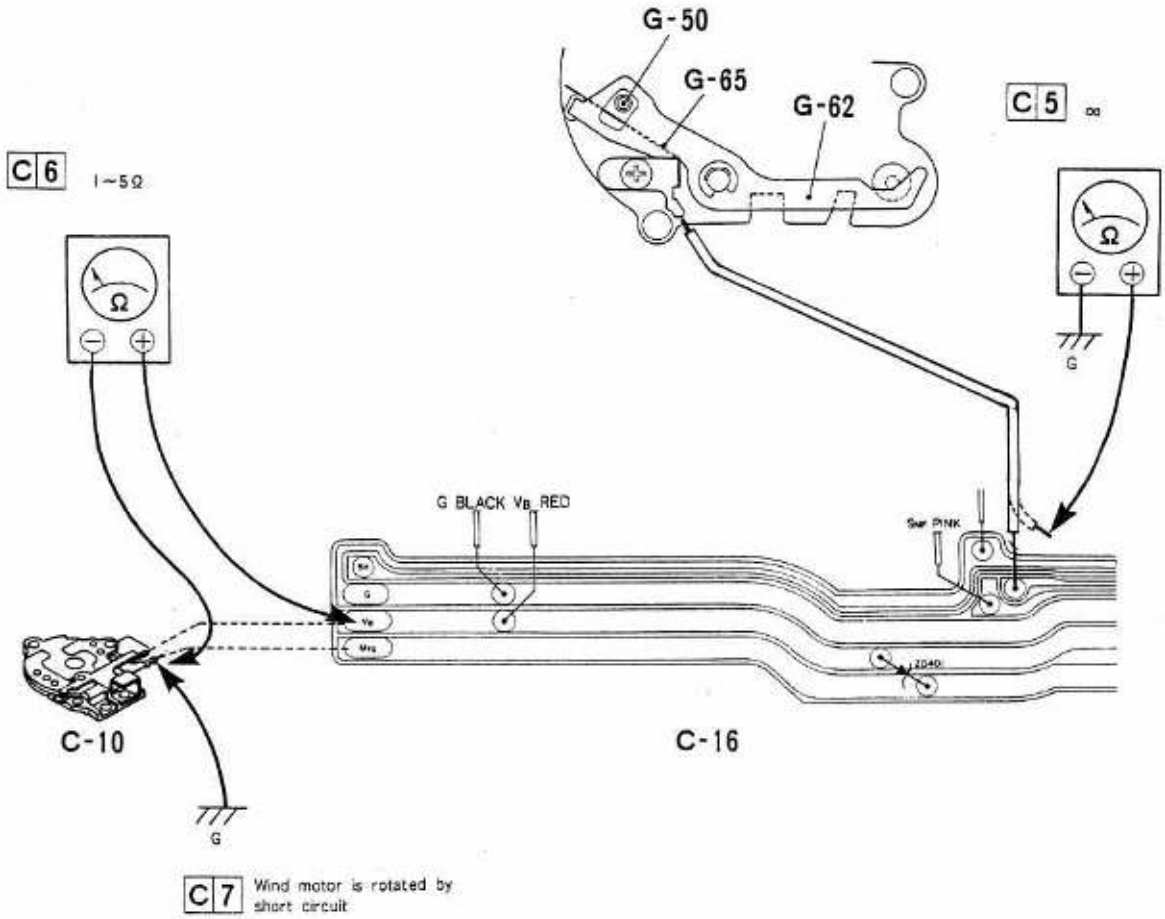

C	Power source	Lead wire	Measuring instrument	Range	Ascertainment
5	Not required	Detach	Tester	Ω	∞
6	Not required	Detach	Tester	Ω	1 – 5 Ω
7	Required (6V)	Detach			Wind motor is rotated by short circuit

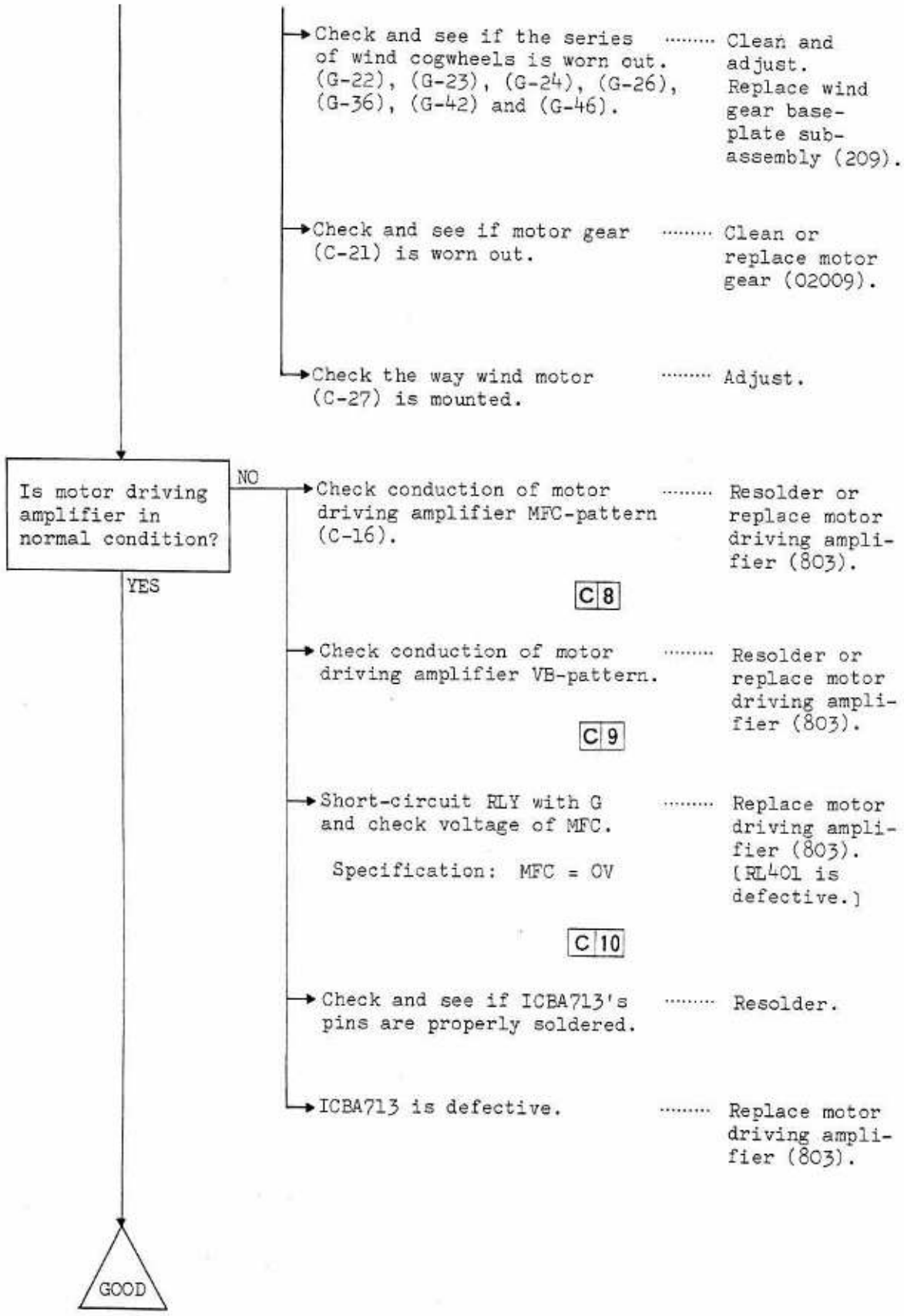
Check and see if the series of wind cogwheels is worn out. (G-22), (G-23), (G-24), (G-26), (G-36), (G-42) and (G-46).
Clean and adjust. Replace wind gear base-plate sub-assembly (209).
Check and see if motor gear (C-21) is worn out.
Clean or replace motor gear (02009).
Check the way wind motor (C-27) is mounted.
Adjust.
Is motor driving amplifier in normal condition?
NO
YES
Check conduction of motor driving amplifier MFC-pattern (C-16).
Resolder or replace motor driving amplifier (803).
C 8
Check conduction of motor driving amplifier VB-pattern.
Resolder or replace motor driving amplifier (803).
C 9
Short-circuit RLY with G and check voltage of MFC.
Specification: MFC = OV
Replace motor driving amplifier (803). [RL401 is defective.]
C 10
Check and see if ICBA713's pins are properly soldered.
Resolder.
ICBA713 is defective.
Replace motor driving amplifier (803).
GOOD

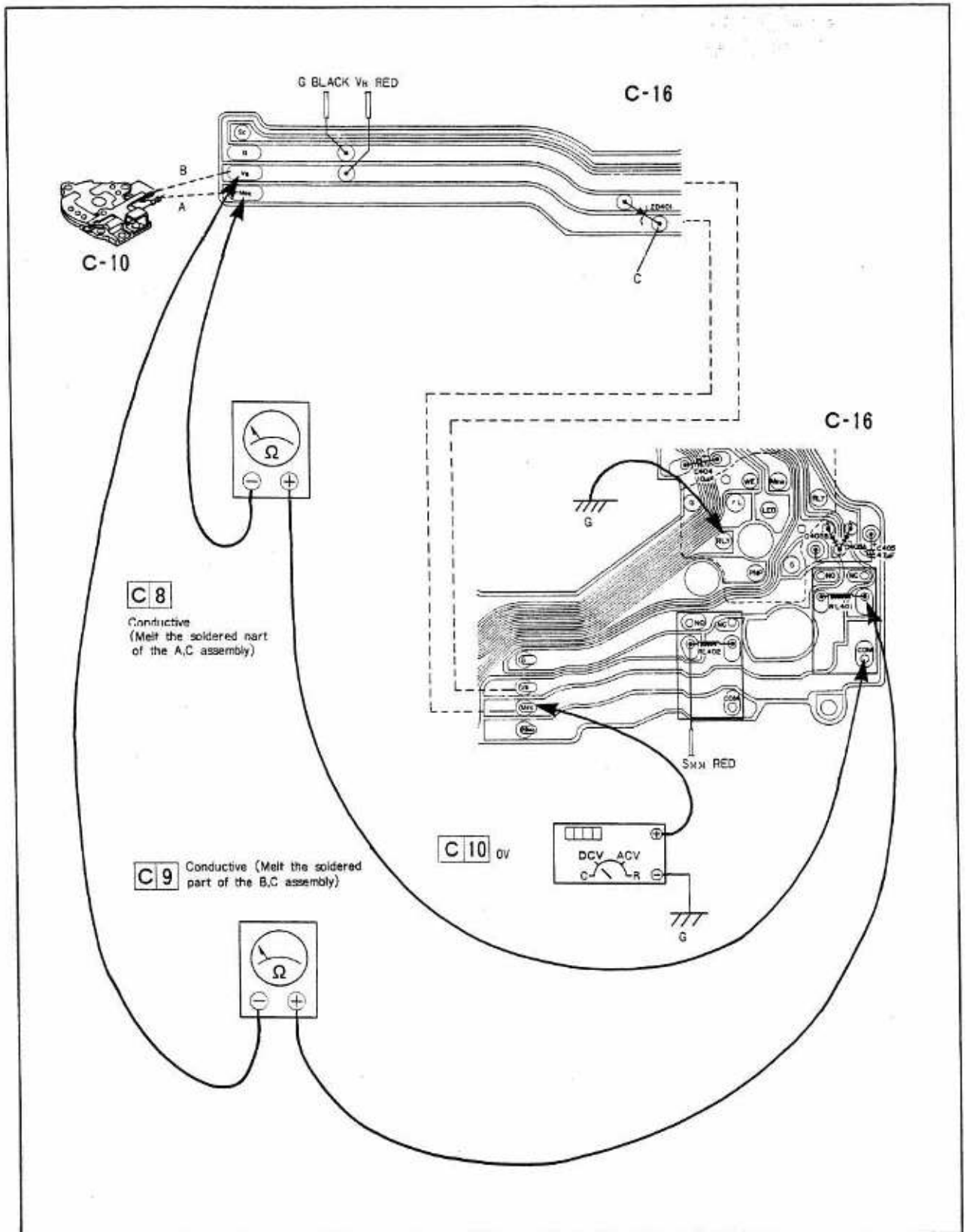

C	Power source	Lead wire	Measuring instrument	Range	Ascertainment
8	Not required	Detach	Tester	Ω	Conductive (Melt the soldered part of the A,C assembly)
9	Not required	Detach	Tester	Ω	Conductive (Melt the soldered part of the B,C assembly)
10	Required (6V)		Digital voltmeter	V	0V RLY→G

4-1-2 **POOR AUTO-LOADING**

Is film counter switch properly turned ON and OFF?

NO → Space between film counter switch (H-17) and earth pin (H-23) is dirty or there is a lack of contact pressure, making contact unstable. ..... Clean or adjust.

Specification:

Contact resistance

less than 0.1 Ω

C 1

YES → GOOD

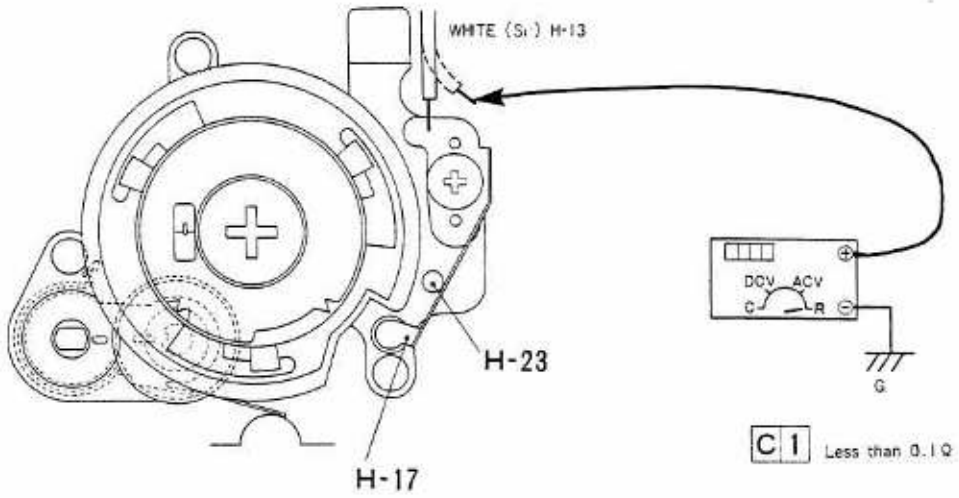

C	Power source	Lead wire	Measuring instrument	Range	Ascertainment
1	Not required	Detach	Digital voltmeter	Ω	Less than 0.1Ω

4-1-3 EXCESSIVE AUTO-LOADING

Is film counter properly advanced?

- NO → When counter drum (H-4) does not rotate, film counter switch (H-17) is kept turned ON at all times. ..... Refer to "Film counter does not advance." (4-6-2).
- YES ↓

Is film counter switch properly turned ON and OFF?

- NO → When film counter switch (H-17) does not turned OFF immediately before appearance of "1" with manual rotation of counter drum (H-4). ..... Adjust. Resolder or replace lead wire (08101).

  C 1

- NO → Connection of the film counter drum A is improper. ..... Glued.
- YES ↓

Is wind switch properly turned ON and OFF?

- NO → Wind switch plate (F-51) or SMF switch lead wire (G-16) is short-circuited with body. ..... Adjust or replace lead wire (08102).
- NO → Wind switch plate is not coupled to cam gear (G-42) and wind stop lever (F-43), preventing it from being turned OFF with wind switch earth pin (G-51). ..... Adjust.

  C 2

- YES ↓

Is lock claw switch insulated from ground?

- NO → Lock claw switch plate B (M-55), lock claw switch plate A (M-57) and lock claw switch lead wire (yellow green, M-45) is short-circuited with ground. ..... Adjust. Resolder or replace lead wire (08105).

  C 3

- YES ↓

Is motor driving amplifier in normal condition?

- NO → ..... Refer to "Wind motor continuous rotation." (4-1-6).
- YES ↓

GOOD

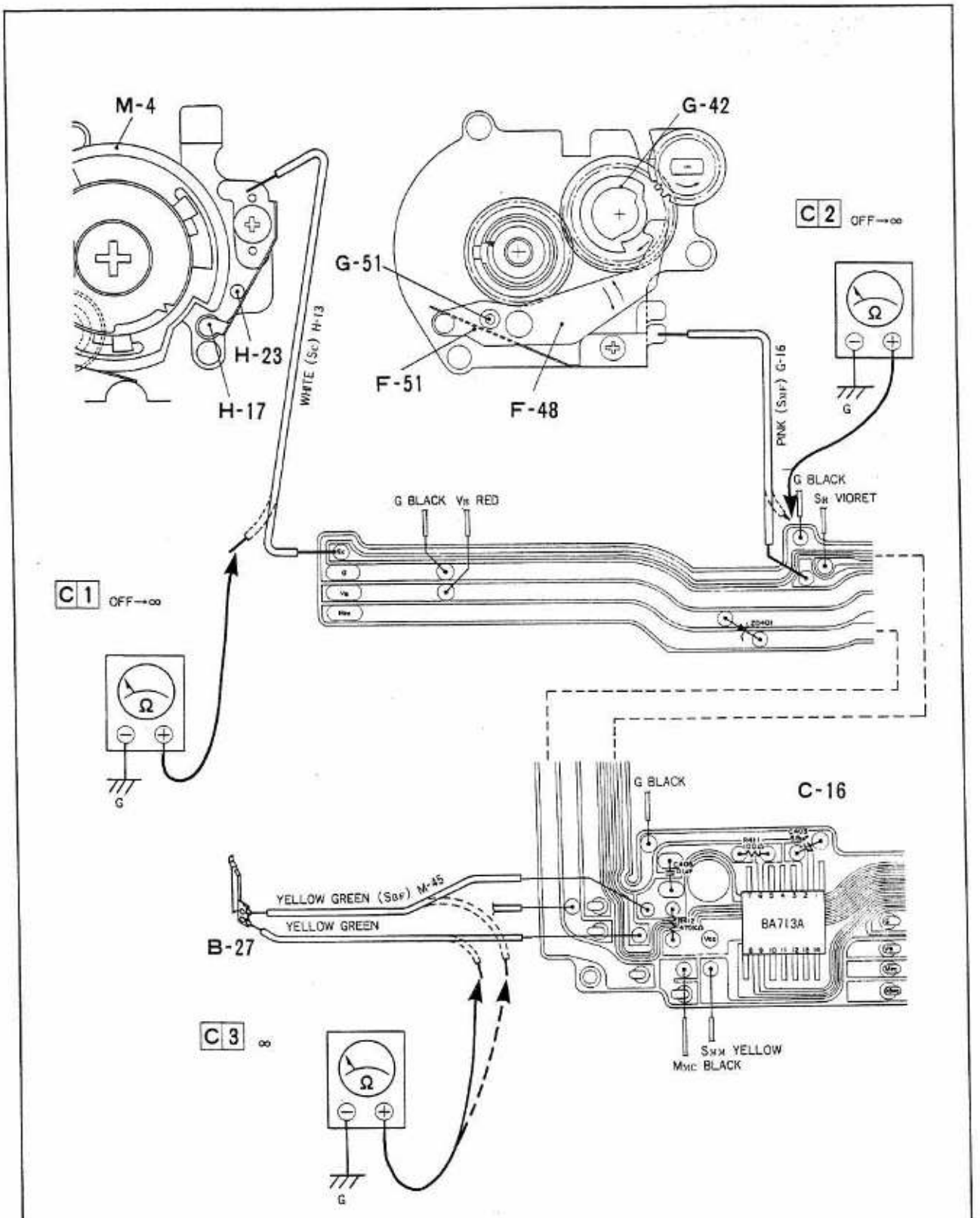

C	Power source	Lead wire	Measuring instrument	Range	Ascertainment
1	Not required	Detach	Tester	Ω	OFF→∞
2	Not required	Detach	Tester	Ω	OFF→∞
3	Not required	Detach	Tester	Ω	∞

4-1-4 INDEQUATE AUTO-LOADING

Does film counter return to original position?

NO → When backlid (A-7) has been opened, index mark in film counter window (I-32) does not conform to "S" on scale plate (H-6). ····· Refer to "Film counter unreturnable to original position." (4-6-1).

YES ↓

Does film counter stop with appearance of "1"?

NO → Film counter switch (H-17) is not turned ON with earth pin (H-23) immediately before appearance of "1" with scale plate (H-6). ····· Adjust film counter switch.

Specification:

Contact resistance

less than 0.1Ω

C 1

YES ↓

GOOD

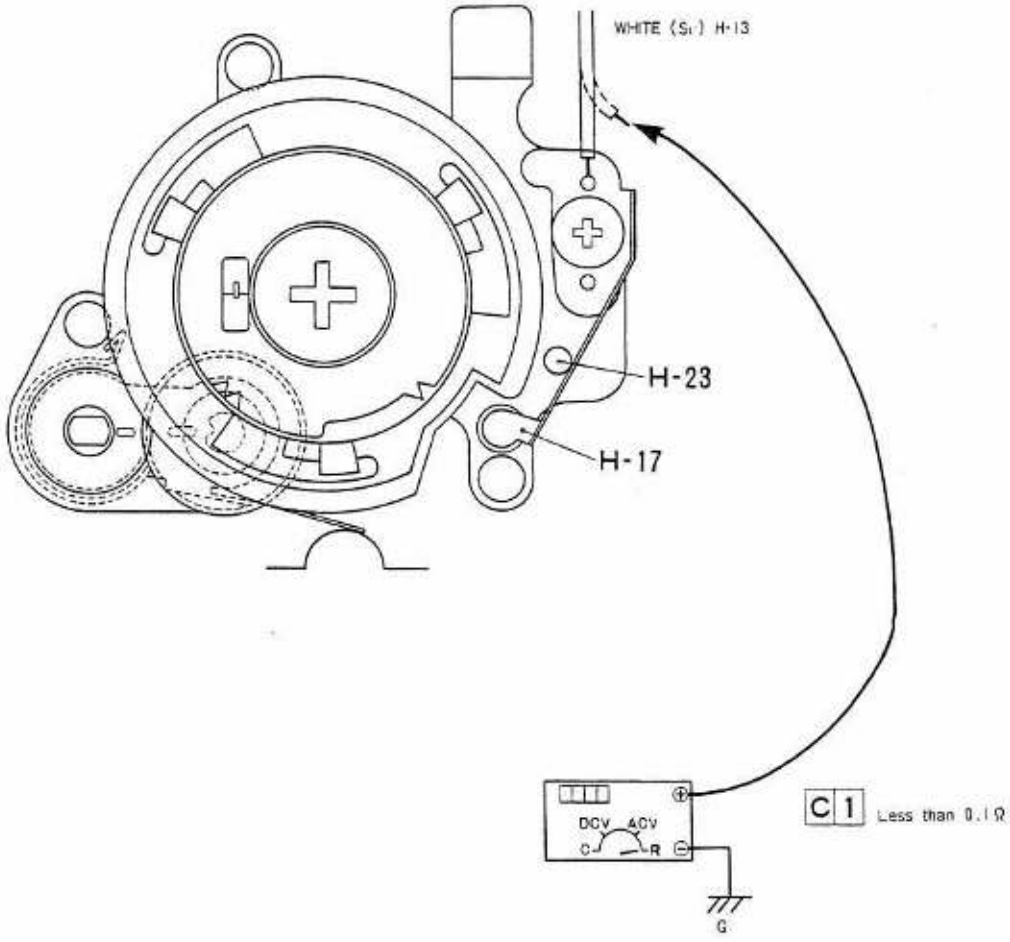

C	Power source	Lead wire	Measuring instrument	Range	Ascertainment
1	Not required	Detach	Digital voltmeter	Ω	Less than 0.1 Ω

4-1-5 WINDING SYSTEM DOES NOT OPERATE

Does auto-loading system operate?

- NO → Film is not taken up by revolving power of wind motor (F-45). ····· Refer to "Auto-loading system does not operate." (4-1-1).
- YES ↓

Is motor driving amplifier in normal condition?

- NO →
  - Check and see if ICBA713A's SMF terminal rises to the surface. ····· Resolder.
  - Check the wave form of ICBA713A's C3 terminal. ····· Replace motor driving amplifier (803).

    C1
  - Check the wave form of ICBA713A's SMF terminal. ····· Replace motor driving amplifier (803).

    C2
- YES ↓

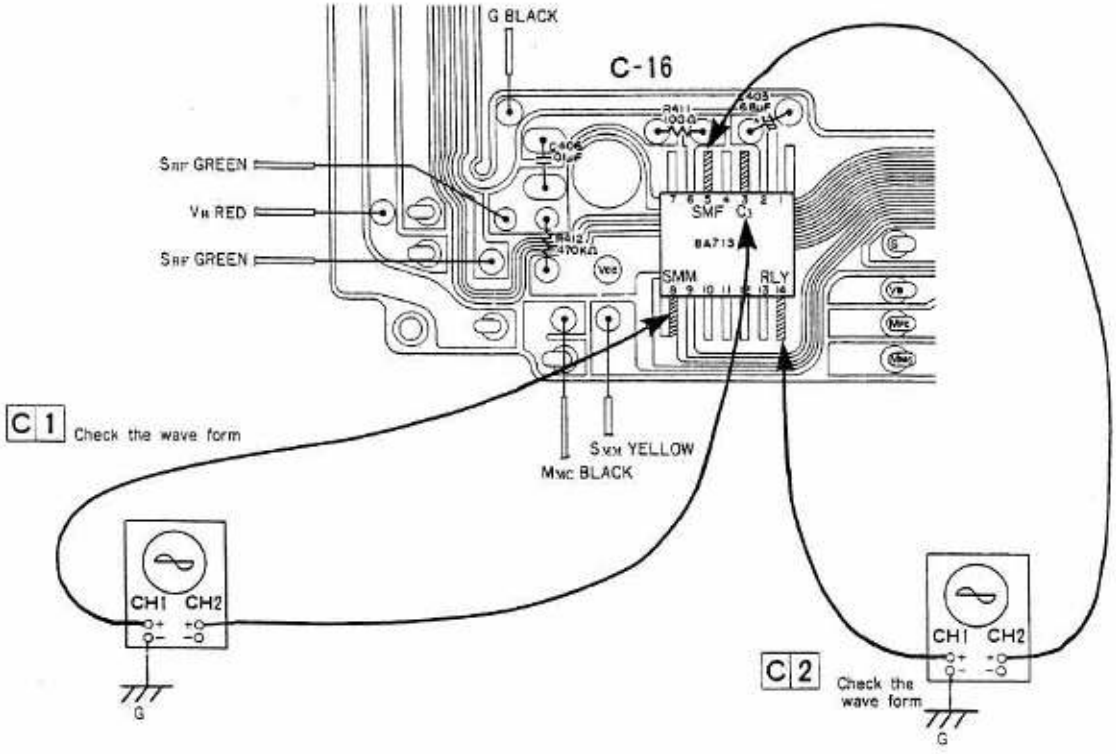

C1

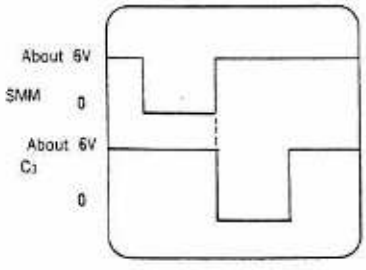

	Voltage	Time	Probe
CH1	0.2V/DIV	10~50mS/DIV	10 : 1
CH2	0.2V/DIV	10~50mS/DIV	10 : 1

C2

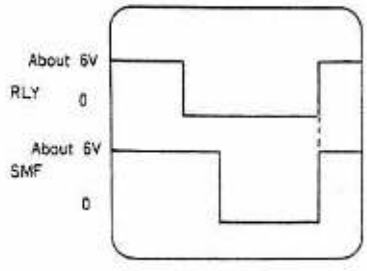

	Voltage	Time	Probe
CH1	0.2V/DIV、	10~50mS/DIV	10 : 1
CH2	0.2V/DIV、	10~50mS/DIV	10 : 1

C	Power source	Lead wire	Measuring instrument	Range	Ascertainment
1	Required (6V)		Oscilloscope	0.2V/DIV 10~50mS/DIV	Check the wave form (Probe 10 : 1)
2	Required (6V)		Oscilloscope	0.2V/DIV 10~50mS/DIV	Check the wave form (Probe 10 : 1)

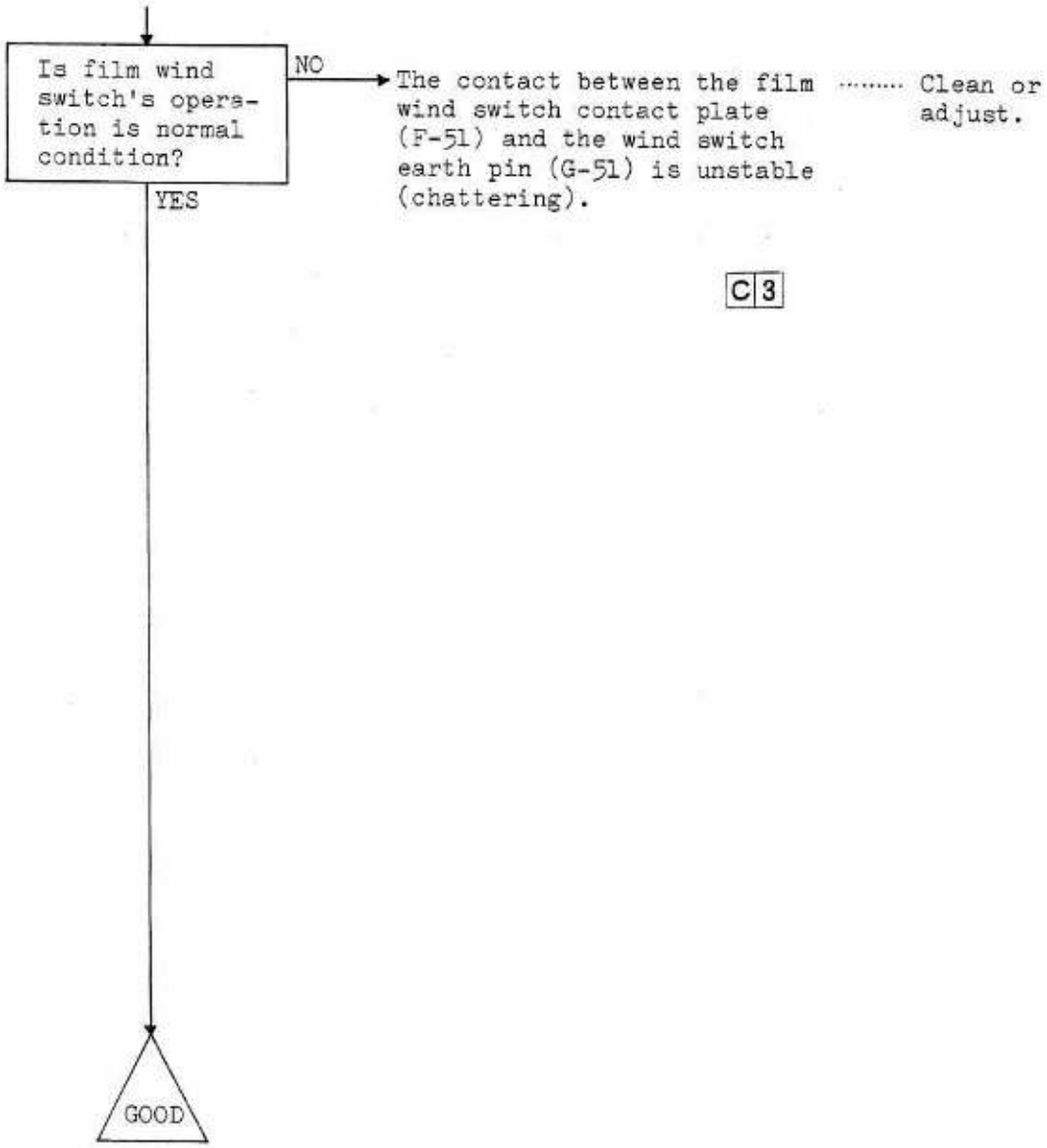
Is film wind switch's operation is normal condition?
NO
The contact between the film wind switch contact plate (F-51) and the wind switch earth pin (G-51) is unstable (chattering).
Clean or adjust.
C3
YES
GOOD

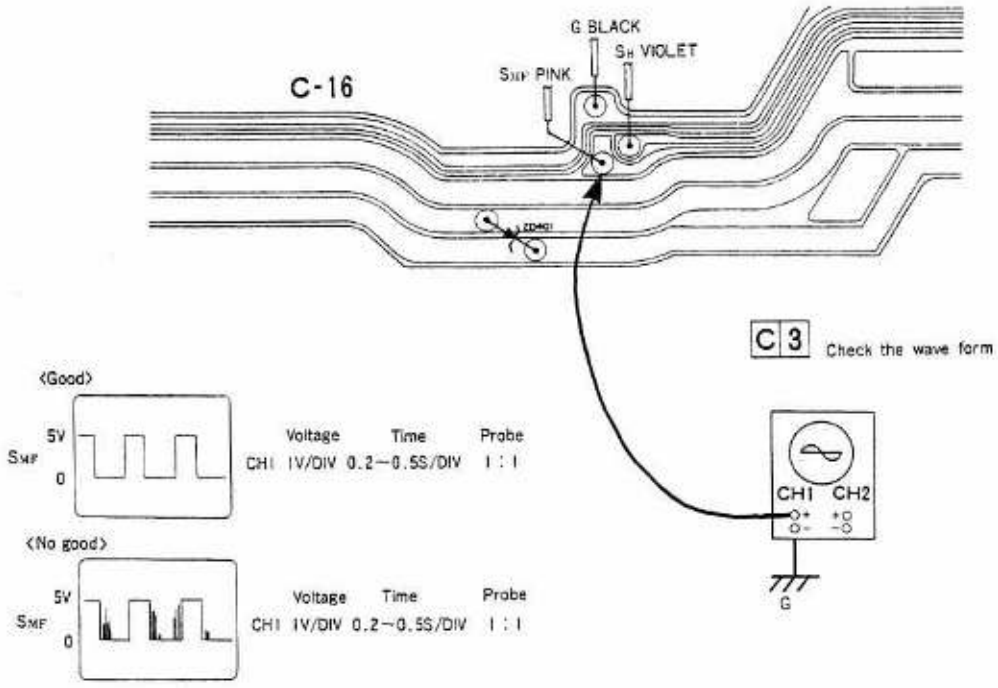

C	Power source	Lead wire	Measuring instrument	Range	Ascertainment
3	Required (6V)		Oscilloscope	1V/DIV 0.2~0.5S/DIV	Check the wave form(Probe1:1)

4-1-6 WIND MOTOR CONTINUOUS ROTATION

Does film counter indicate a figure greater than "1"?

- NO → Refer to "Film counter does not advance." (4-6-2).
- YES ↓

Is film counter switch turned ON and OFF?

- NO → When film counter has returned to original position, film counter switch (H-17) is turned ON by earth pin (H-23) by tip of film counter duram (H-4). It is not turned OFF after appearance of "1" with rotation of film counter plate. ..... Adjust and clean. **C 1**
- NO → Short-circuited of film counter lead wire (white, H-14). ..... Resolder or replace lead wire (08101). **C 2**
- YES ↓

Is lock claw switch's operation normal?

- NO → Lock claw switch plate A (M-57), lock claw switch plate B (M-55) is short-circuited with ground. ..... Adjust. resolder or replace lock claw cover subassembly (612). **C 3**
- YES ↓

Is wind switch's operation normal?

- NO → Wind switch plate (F-51) is right to turned ON and OFF with wind switch earth pin (G-51). ..... Adjust. **C 4**
- NO → SMF switch lead wire (pink, G-16) is nonconductive with wind switch plate and SMF terminal of motor driving amplifier (C-16). ..... Resolder or replace lead wire (08102). **C 5**
- YES ↓

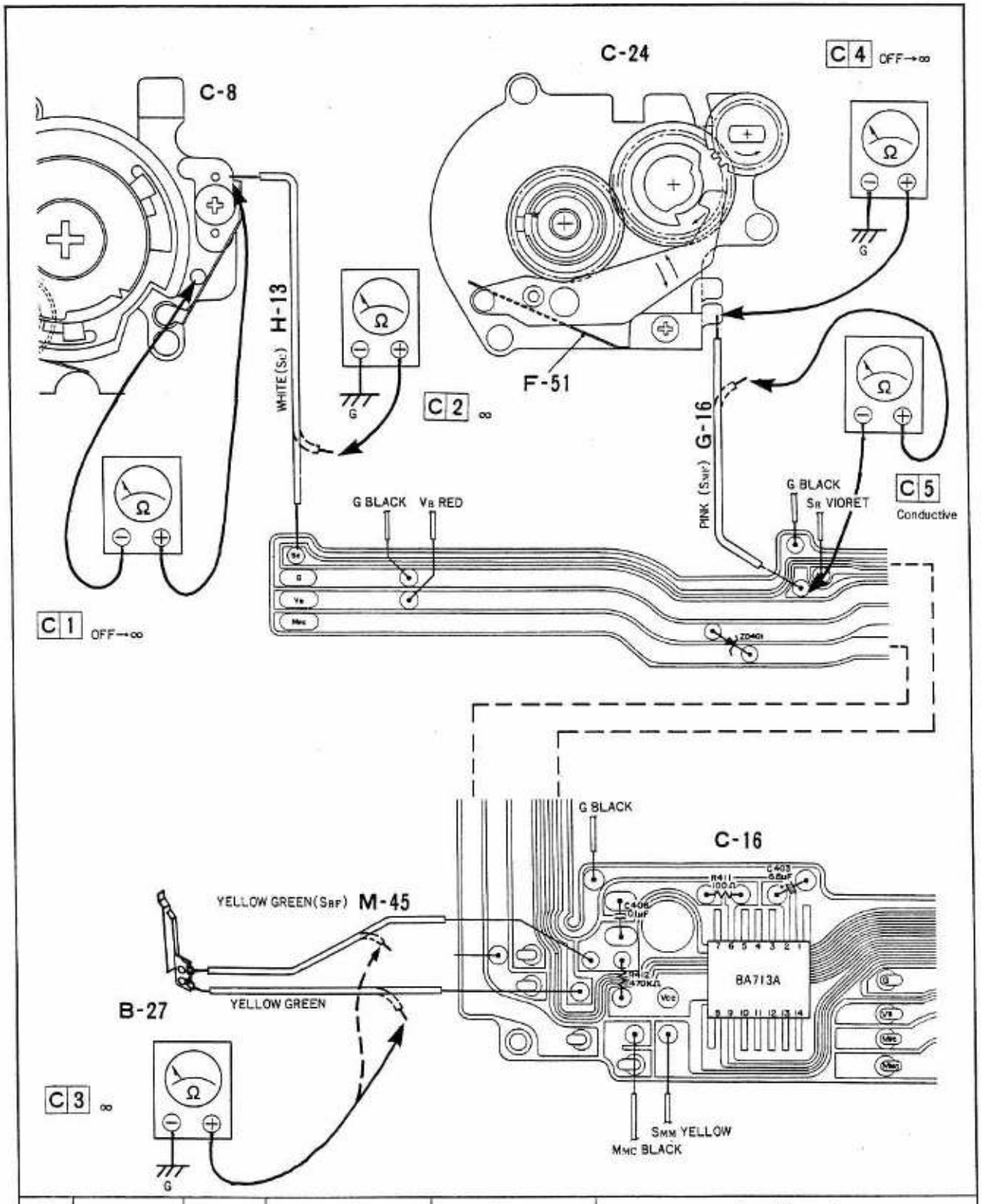

C	Power source	Lead wire	Measuring instrument	Range	Ascertainment
1	Not required		Tester	Ω	OFF→∞
2	Not required	Detach	Tester	Ω	∞
3	Not required	Detach	Tester	Ω	∞
4	Not required		Tester	Ω	OFF→∞
5	Not required	Detach	Tester	Ω	Conductive

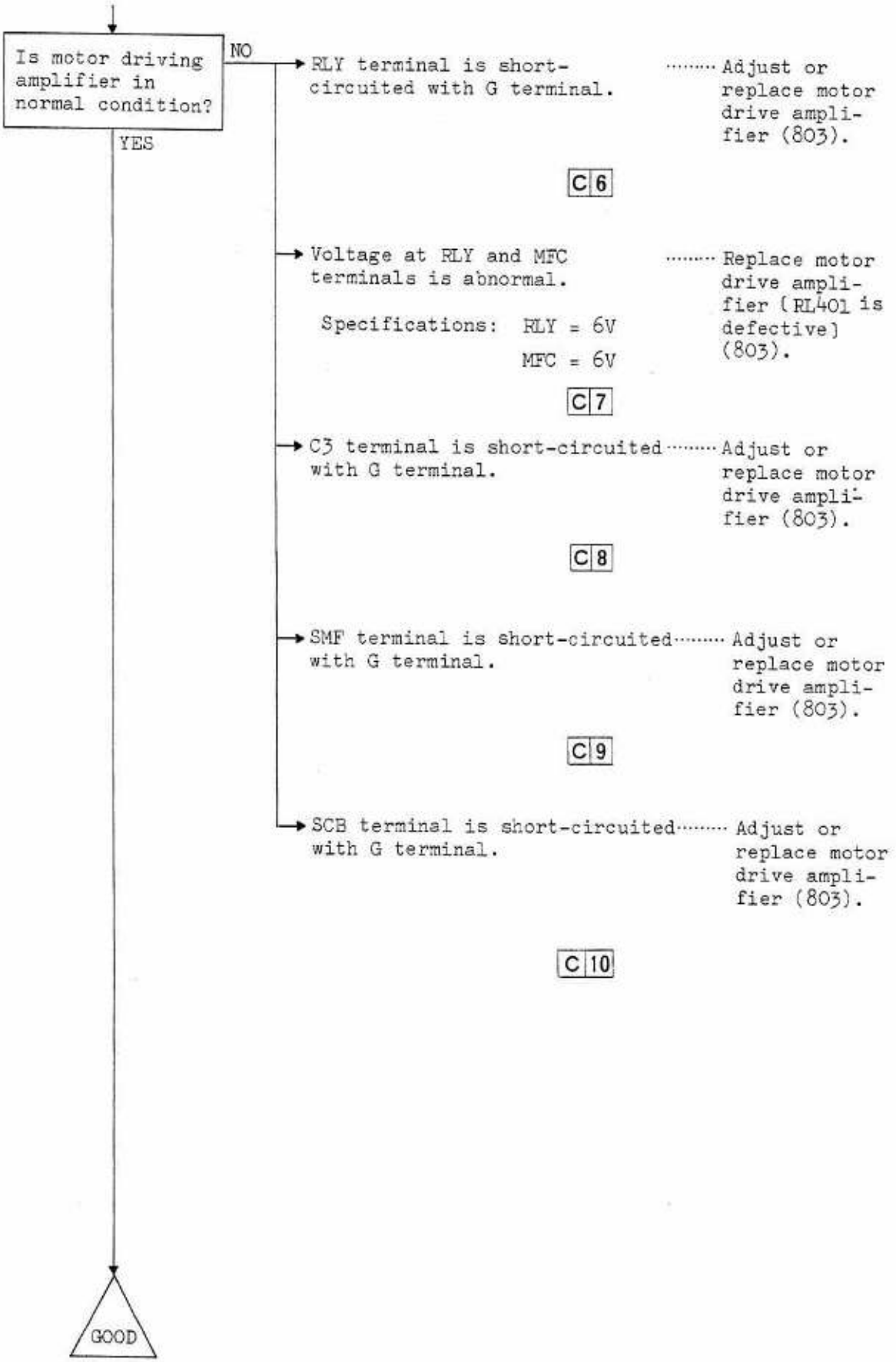
Is motor driving amplifier in normal condition?
NO
YES
RLY terminal is short-circuited with G terminal.
Adjust or replace motor drive amplifier (803).
C 6
Voltage at RLY and MFC terminals is abnormal.
Specifications: RLY = 6V
MFC = 6V
Replace motor drive amplifier (RL401 is defective) (803).
C 7
C3 terminal is short-circuited with G terminal.
Adjust or replace motor drive amplifier (803).
C 8
SMF terminal is short-circuited with G terminal.
Adjust or replace motor drive amplifier (803).
C 9
SCB terminal is short-circuited with G terminal.
Adjust or replace motor drive amplifier (803).
C 10
GOOD

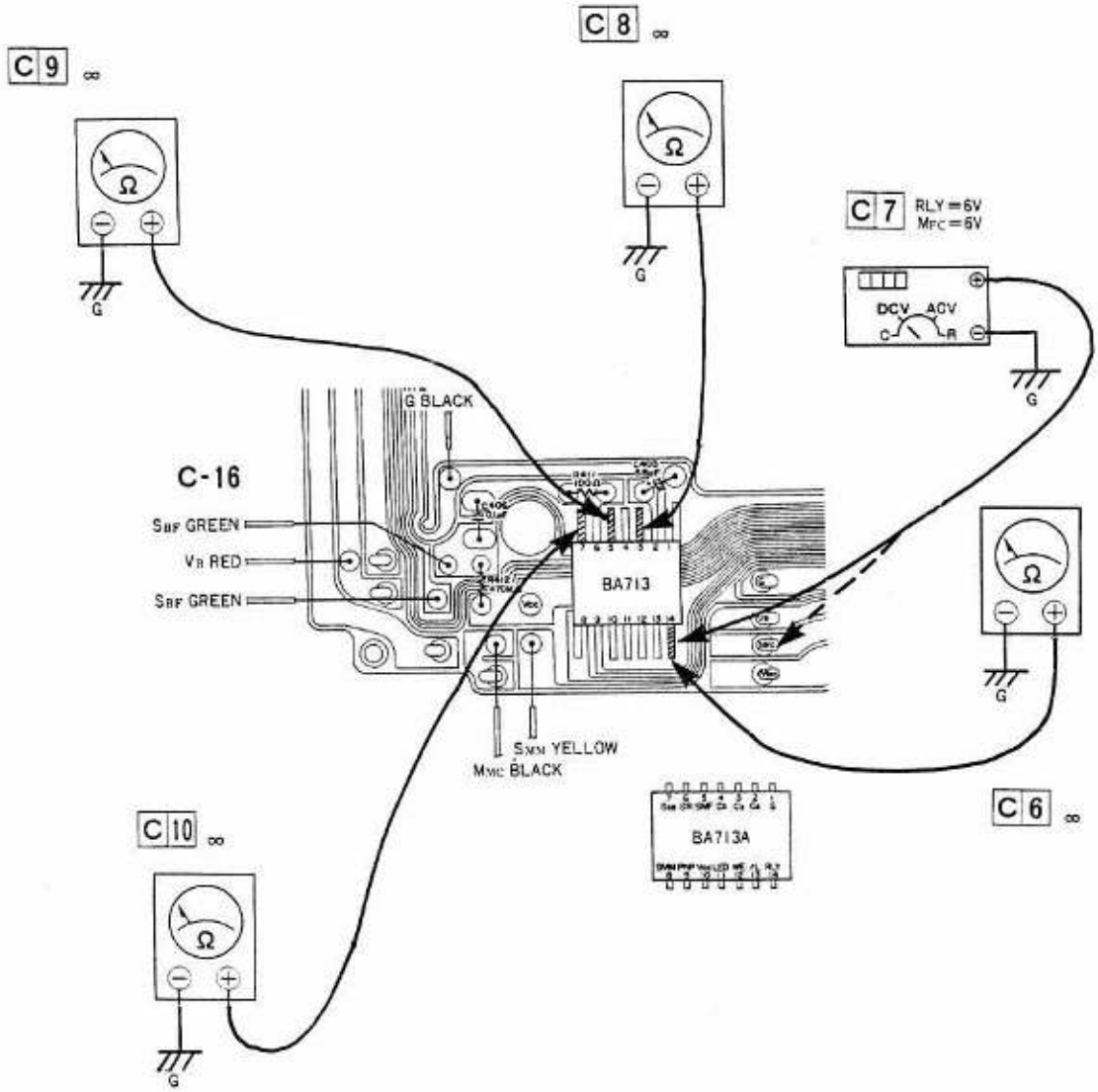

C	Power source	Lead wire	Measuring instrument	Range	Ascertainment
6	Not required	Detach	Tester	Ω	∞
7	Required (6V)		Digital voltmeter	V	RLY=6V MFC=6V
8	Not required		Tester	Ω	∞
9	Not required		Tester	Ω	∞
10	Not required		Tester	Ω	∞

4-1-7 **LED SHOWING THE FILM TENSION DOES NOT TURNED ON**

Is LED normal?

- NO → Soldering of the LED showing the film tension or LED itself is defective. ····· Resolder or replace top cover F.P.C. (05158).

  C 1

- YES ↓

Is top cover F.P.C. normal?

- NO → Check conduction of PNP and LED lines of top cover F.P.C. (I-26). ····· Replace top cover F.P.C. (05158).

  C 2

- YES ↓

Is motor drive amplifier normal?

- NO → Voltage at RLY terminal is abnormal with film stretched out. ····· Replace motor drive amplifier (803).

  Specification: RLY = 6V

  C 3

- NO → Voltage at PNP terminal is abnormal with film stretched out. ····· Replace motor drive amplifier (803).

  Specification:

  PNP = Less than 0.3V

  C 4

- NO → Check and see if VCC, G and PNP terminals of ICBA713A rise above the surface. ····· Resolder.

- YES ↓

Is conduction of top cover F.P.C. and ASA resistor aramatures normal?

- NO → Check contact of PNP and LED terminals of top cover F.P.C. (I-26) and ASA resistor (B-34). ····· Clean or replace ASA resistor (08013).

- YES ↓

GOOD

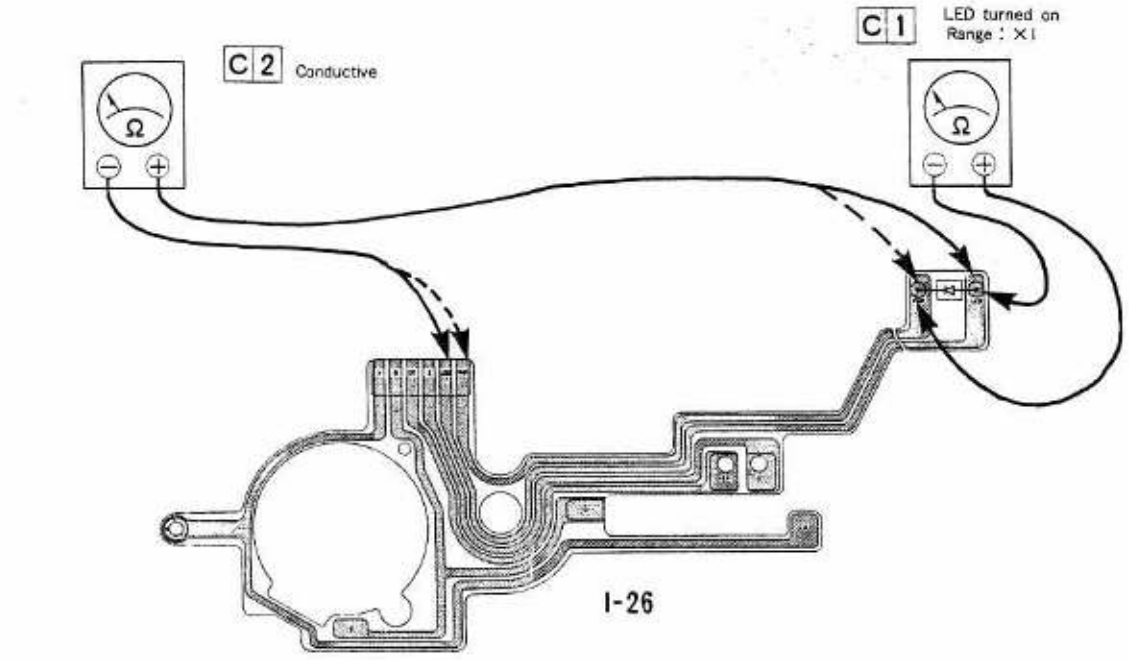

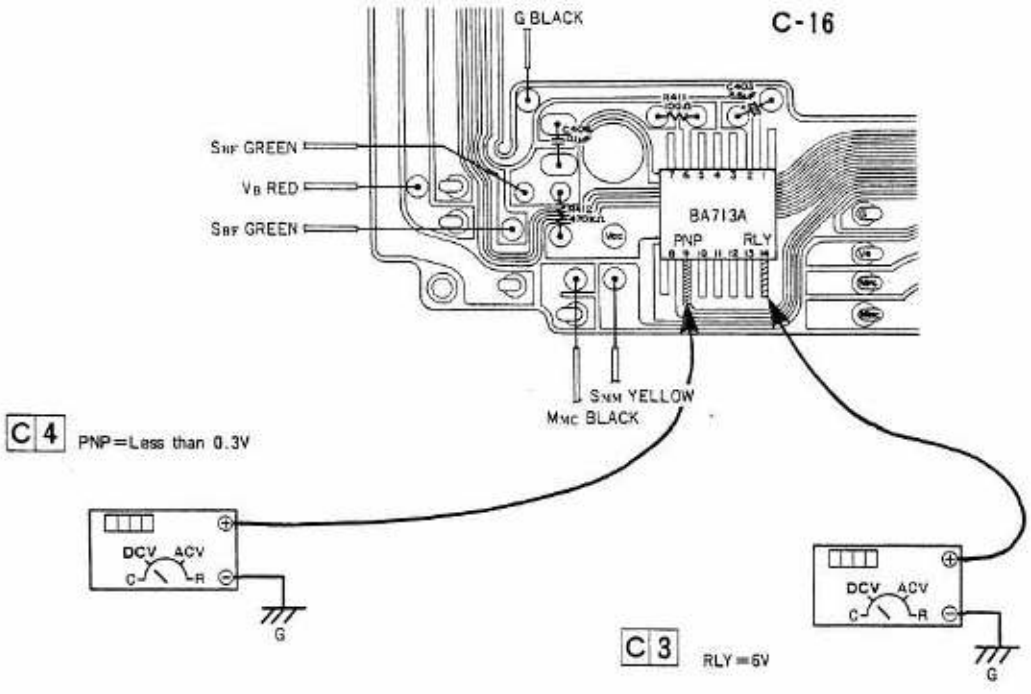

C	Power source	Lead wire	Measuring instrument	Range	Ascertainment
1	Not required		Tester	Ω (×1)	LED turned on
2	Not required		Tester	Ω	Conductive
3	Required (6V)		Digital voltmeter	V	RLY=6V (In a state with film stretched out)
4	Required (6V)		Digital voltmeter	V	PNP=Less than 0.3V (In a state with film stretched out)

4-1-8 **LED SHOWING THE FILM TENSION DOES NOT TURNED OFF**

Is rewind switch properly turned ON or OFF?

- NO → Rewind switch plate (G-65) is not conductive when rewind switch lever (G-62) is rewound with sprocket shaft (C-17). ..... Adjust or clean.

  Specification:

  Contact registance less than 0.1Ω

  C 1

- NO → Check the connection of SR switch lead wires (G-32). ..... Resolder.

- YES ↓

Is motor drive amplifier normal?

- NO → Check the conduction of SR line. ..... Replace motor drive amplifier (803).

  C 2

- NO → Check and see if ICBA713A's SR terminal rise above the surface. ..... Resolder.

- NO → Voltage of PNP terminal is abnormal. ..... Replace motor drive amplifier (803).

  Specification: PNP = 4 ~ 6V

  C 3

- NO → Voltage of C4 terminal is abnormal. ..... Replace motor drive amplifier (803).

  Specification:

  C4 = less than 1V

  C 4

- NO → Voltage of RLY terminal is abnormal. ..... Replace motor drive amplifier (803).

  Specification: RLY = 6V

  C 5

- YES ↓

GOOD

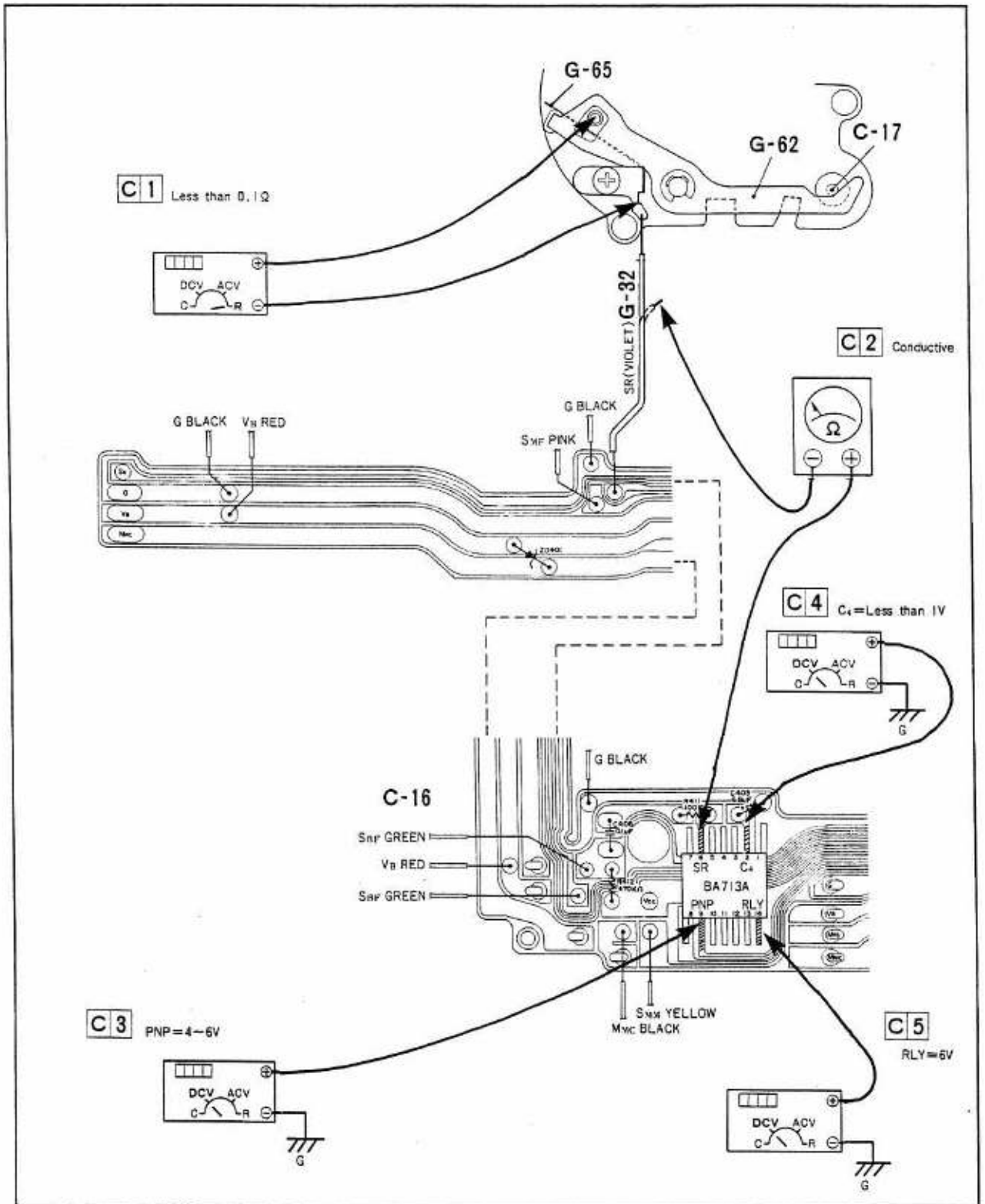

C	Power source	Lead wire	Measuring instrument	Range	Ascertainment
1	Not required	Detach	Digital voltmeter	Ω	Less than 0.1Ω
2	Not required		Tester	Ω	Conductive
3	Required (6V)		Digital voltmeter	V	PNP=4~6V
4	Required (6V)		Digital voltmeter	V	C_4=Less than 1V
5	Required (6V)		Digital voltmeter	V	RLY=6V

4-1-9 SPACE BETWEEN PICTURE FRAME IS NOT EVEN

Does rewind spindle rotate smoothly?

- NO → Improper sliding of rewind spindle (A-9) and ASA resister's bearing (B-30). ..... Clean and adjust or replace rewind spindle. (02410).
- NO → Rewind spindle washer (A-11) is deformed. ..... Adjust or replace washer. (02412).
- YES ↓

Does the series of wind cogwheels rotate only in one direction?

- NO → Detach driving gear (G-36) and check worn-out condition and position of roller spring (G-38). ..... Adjust or replace wind gear base-plate sub-assembly (209).

  C 1

- NO → Check position of roller (G-39) and see if it is dirty. ..... Clean and adjust.

  C 1

- NO → Check and see if clutch (G-40) is dirty and worn out. ..... Clean and adjust.

  C 1

- NO → Check and see if idle gear shaft (G-47) is dirty. ..... Clean.

  C 1

- YES ↓

Is turning ON and OFF of wind switch good in timing?

- NO → Wind switch plate (F-51) must be turned OFF the moment wind stop lever (F-48) coupled to cam gear (G-42) has dropped. The plate must be turned ON the moment the lever has risen. ..... Adjust switch.

  Specification:

  Contact resistance

  less than 0.1 Ω

  C 2

- NO → Cam gear (G-42) is tipped off. ..... Replace wind gear base-plate sub-assembly (209).
- YES ↓

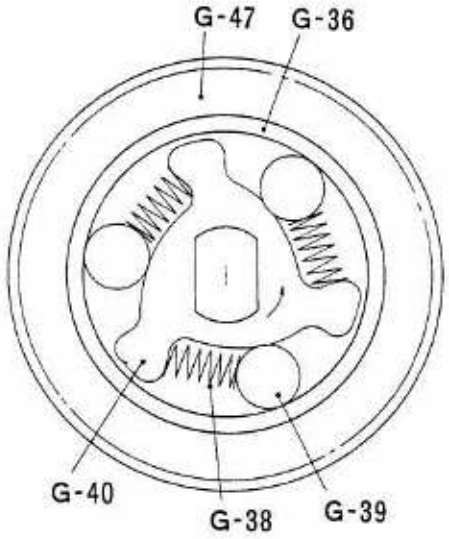

C 1 Visually check

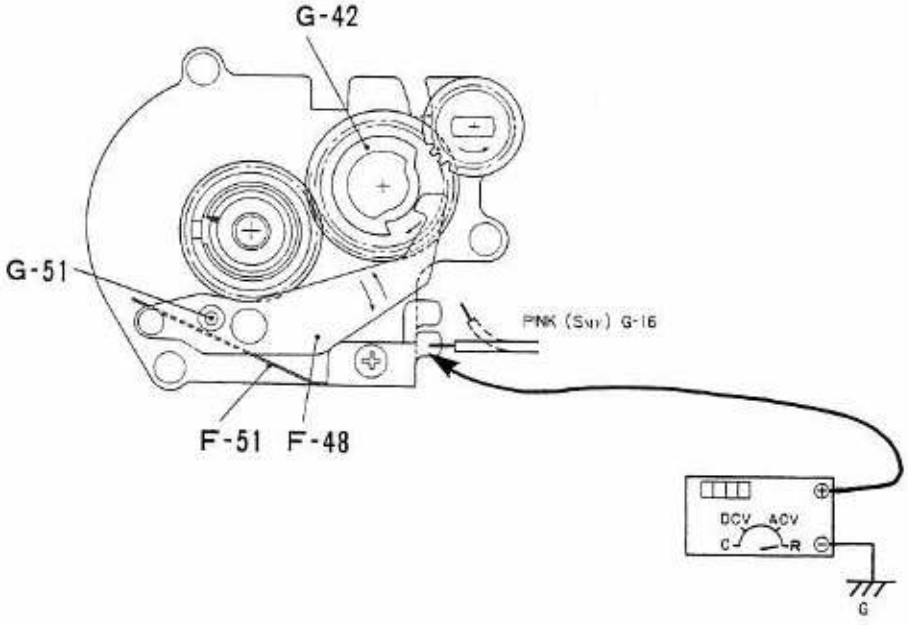

C 2 Less than 0.1 Ω

C	Power source	Lead wire	Measuring instrument	Range	Ascertainment
1	Not required				Visually check
2	Not required	Detach	Digital voltmeter	Ω	Less than 0.1 Ω

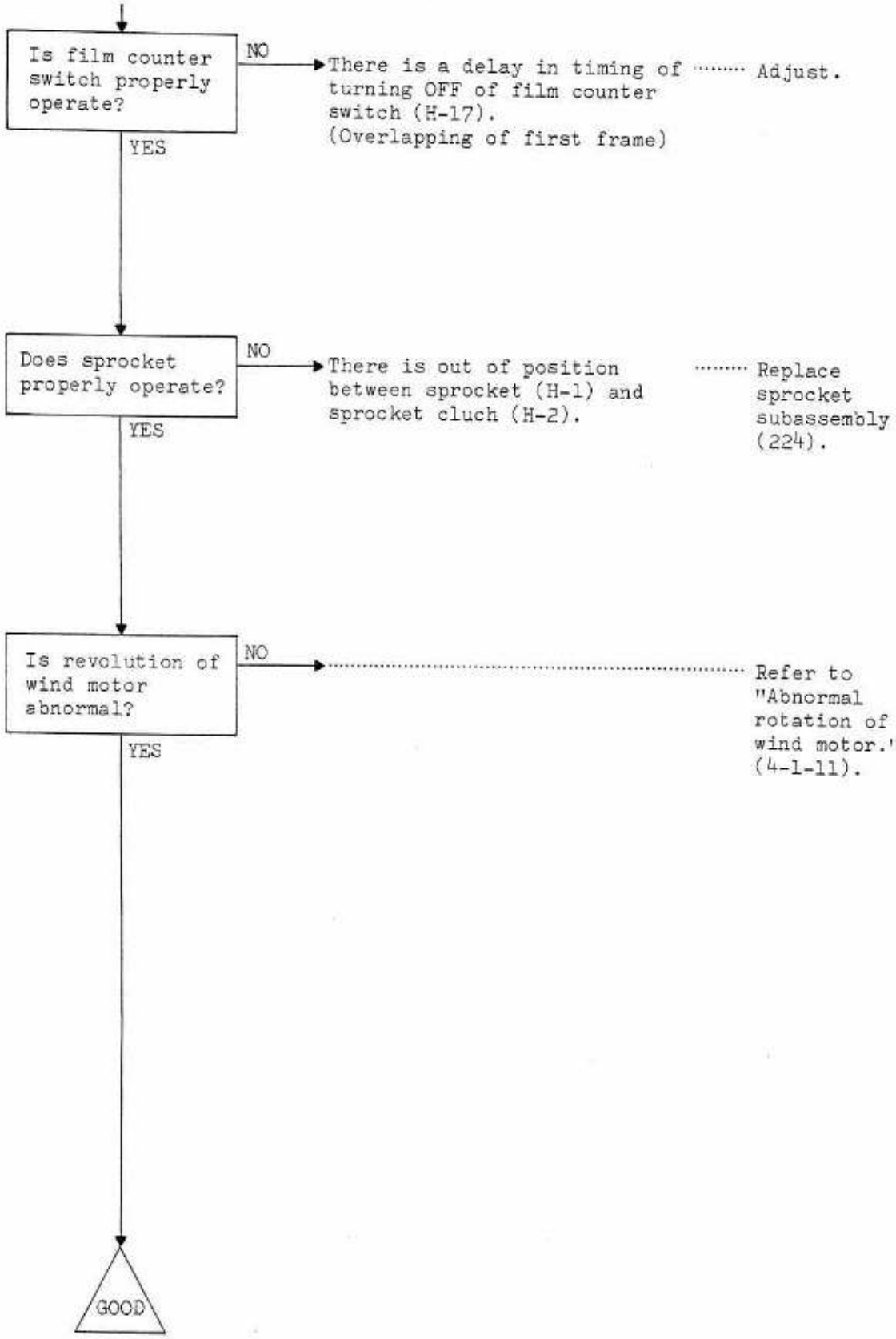
Is film counter switch properly operate?
NO
There is a delay in timing of turning OFF of film counter switch (H-17). (Overlapping of first frame)
Adjust.
YES
Does sprocket properly operate?
NO
There is out of position between sprocket (H-1) and sprocket cluch (H-2).
Replace sprocket subassembly (224).
YES
Is revolution of wind motor abnormal?
NO
Refer to "Abnormal rotation of wind motor." (4-1-11).
YES
GOOD

4-1-10 FILM IS NOT TAKEN UP

Is wind motor plate in proper contact with motor contact plate?

- NO → Contact plate of wind motor (F-45) is in poor contact with motor contact plate A (G-4) and motor contact plate B (G-6). (Particularly in use of film). ····· Adjust wind motor contact plate.
- YES ↓

Is loading guide properly glued?

- NO → Check the way loading guide is glued. ····· Glued.
- YES ↓

Is pressure of film guide roller plate spring proper?

- NO → Check and see if film guide roller plate spring (F-22) is deformed and check spring pressure of film guide roller (F-23). ····· Adjust.

  Specification:

  Spring pressure at the tip (when action is started) 100 ~ 130g
- YES ↓

Is pressure of spool roller plate spring proper?

- NO → Check and see if spool roller plate spring (M-36) is deformed and also check pressure of its tip. ····· Adjust.

  Specification:

  Spring tip's pressure (the moment it starts moving) 40 ~ 50g
- YES ↓

Is spool rubber properly fitted?

- NO → Check the position where spool rubber (F-43) is fitted and also check and see if it is deformed. ····· Clean or replace wind motor sub-assembly (201).
- YES ↓

Is spool friction proper?

- NO → Measure spool friction and check and see if spool friction spring (G-8) and spool gear (G-46) are worn out. ····· Adjust or replace spool friction spring sub-assembly (207).

  Specification:

  Spool friction 150 ~ 250g
- YES ↓

GOOD

4-1-11 ABNORMAL ROTATION OF WIND MOTOR

Are ground of AE amplifier and motor driving amplifier properly connected?

NO → Ground of AE amplifier (B-25) and motor driving amplifier (C-16) are unstable. ..... Resolder.

YES ↓

Is SMF wind switch properly turned ON and OFF?

NO → The switch is not properly turned ON and OFF as wind switch plate (F-51) chatters when wind motor (F-45) rotates. ..... Adjust SMF switch or replace wind switch sub-assembly (203).

YES ↓

GOOD

C 1

C-16

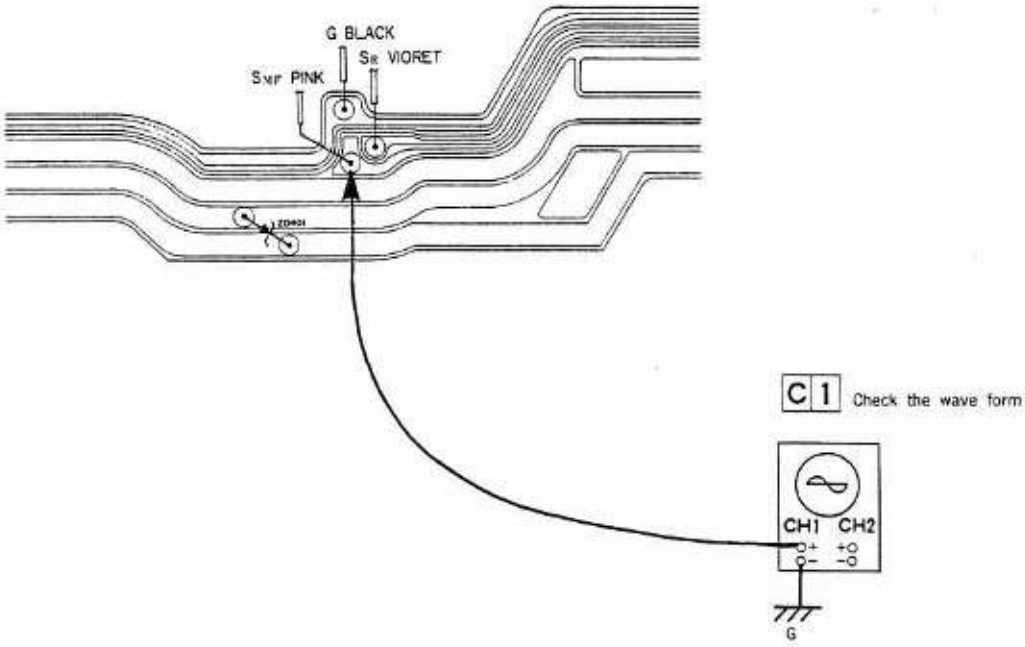

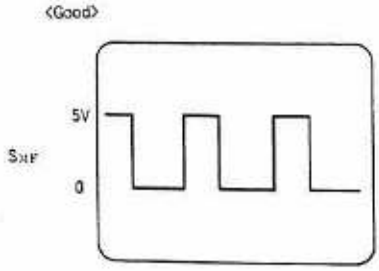

	Voltage	Time	Probe
CH1	0.5V/DIV	0.5S/DIV	1:1

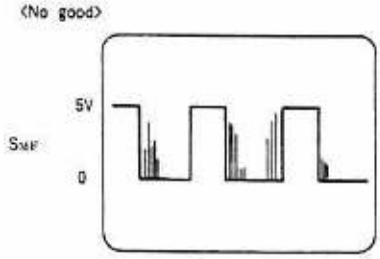

	Voltage	Time	Probe
CH1	1V/DIV	0.2~0.5S/DIV	1:1

C	Power source	Lead wire	Measuring instrument	Range	Ascertainment
1	Required (6V)		Oscilloscope	1V/DIV、0.2~0.5S/DIV	Check the wave form (Probe 1:1)

4-1-12 CONTINUOUS SHOOTING IS DONE AT S-MODE

Is S/C switch of shutter resistor normal?

- NO → Check and see if S/C armature on shutter resistor (B-7). (In a state with S/C switch earth pin turned ON at all times). ····· Adjust.

  C1

- YES ↓

Is base plate terminal normal condition?

- NO → AE amplifier (B-25) is not properly connected with flexible printed circuit board (H-45), as base plate terminal is dirty or improper for some reason. ····· Clean.

- YES ↓

Is AE amplifier normal?

- NO →
  - Check and see if WE terminal on IC16523P rises above the surface. ····· Resolder.

    * Set to continuous shooting at 8 sec.

  - Voltage of WE terminal is abnormal. ····· Replace AE amplifier. (HBIC is defective) (801).

    C2

  - SC line is short-circuited with G. ····· Adjust or replace AE amplifier (801).

    * Measure voltage at R110 (S1 → ON).

    C3

  - C108 is defective. ····· Replace AE amplifier (801)

    C4

  - IC16523P is defective. ····· Replace AE amplifier (801).

- YES ↓

GOOD

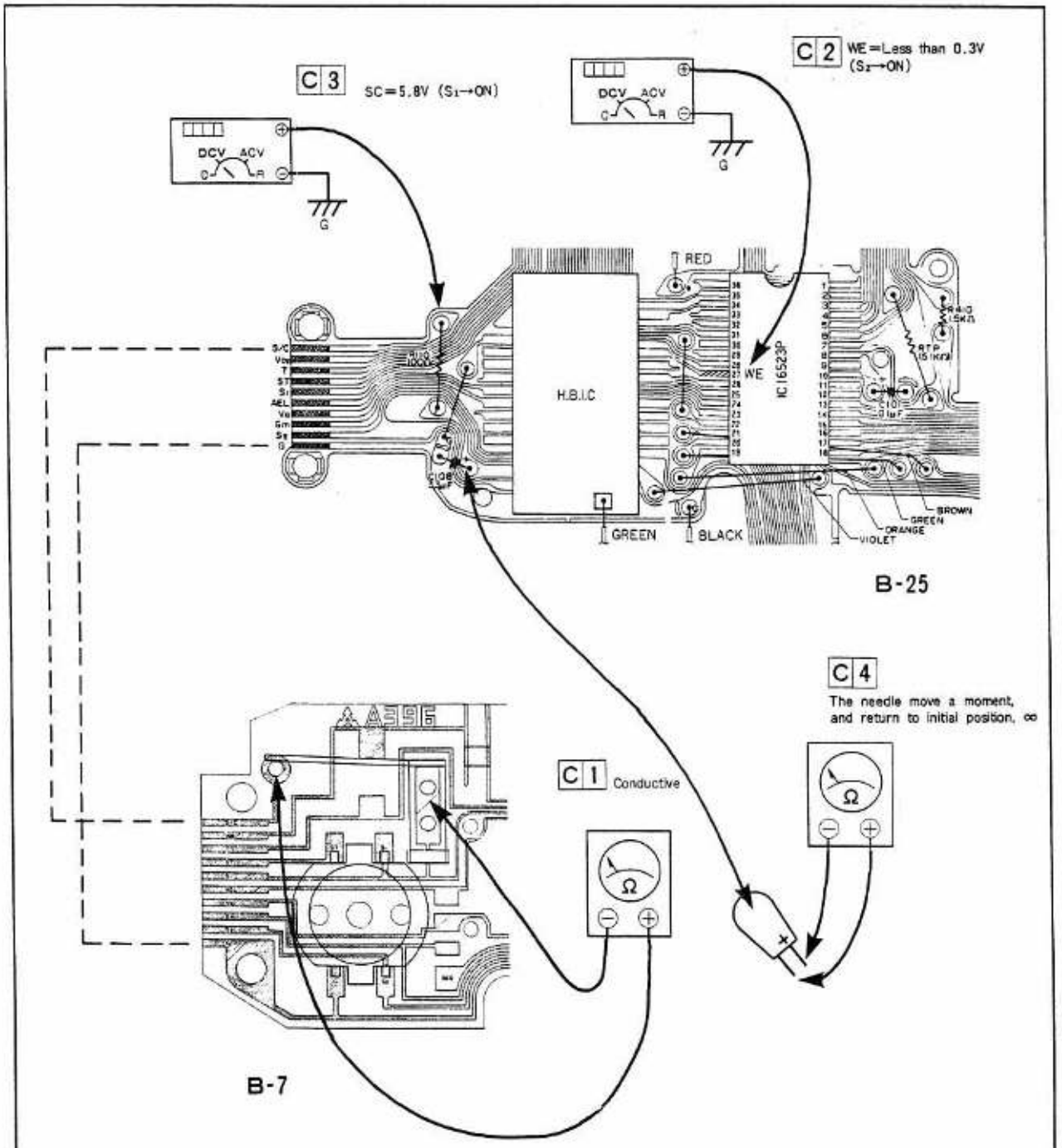

C	Power source	Lead wire	Measuring instrument	Range	Ascertainment
1	Not required		Tester	Ω	Conductive
2	Required (6V)		Digital voltmeter	V	WE=Less than 0.3V (S_2→ON)
3	Required (6V)		Digital voltmeter	V	SC=5.8V (S_1→ON)
4	Not required		Tester	Ω	The needle move a moment, and return to initial position. ∞

4-1-13 **CONTINUOUS SHOOTING CANNOT BE AT C MODE**

Does wind switch properly operate?

NO →

When tip of wind stop lever (F-48) has fallen into groove of cam gear (G-42), wind switch (F-53) is not turned OFF with wind switch earth pin (G-51). ····· Adjust or replace wind switch (203).

C 1

When tip of wind stop lever (F-48) has been lifted up by cam gear (G-42), wind switch (F-53) is not turned ON with wind switch earth pin (G-51). ····· Adjust or replace parts (203).

Specification:

Contact resistance

less than 0.1 Ω

C 2

Check and see if wind switch plate lead wire (G-45) is open-circuit. ····· Replace lead wire (08102).

C 3

YES

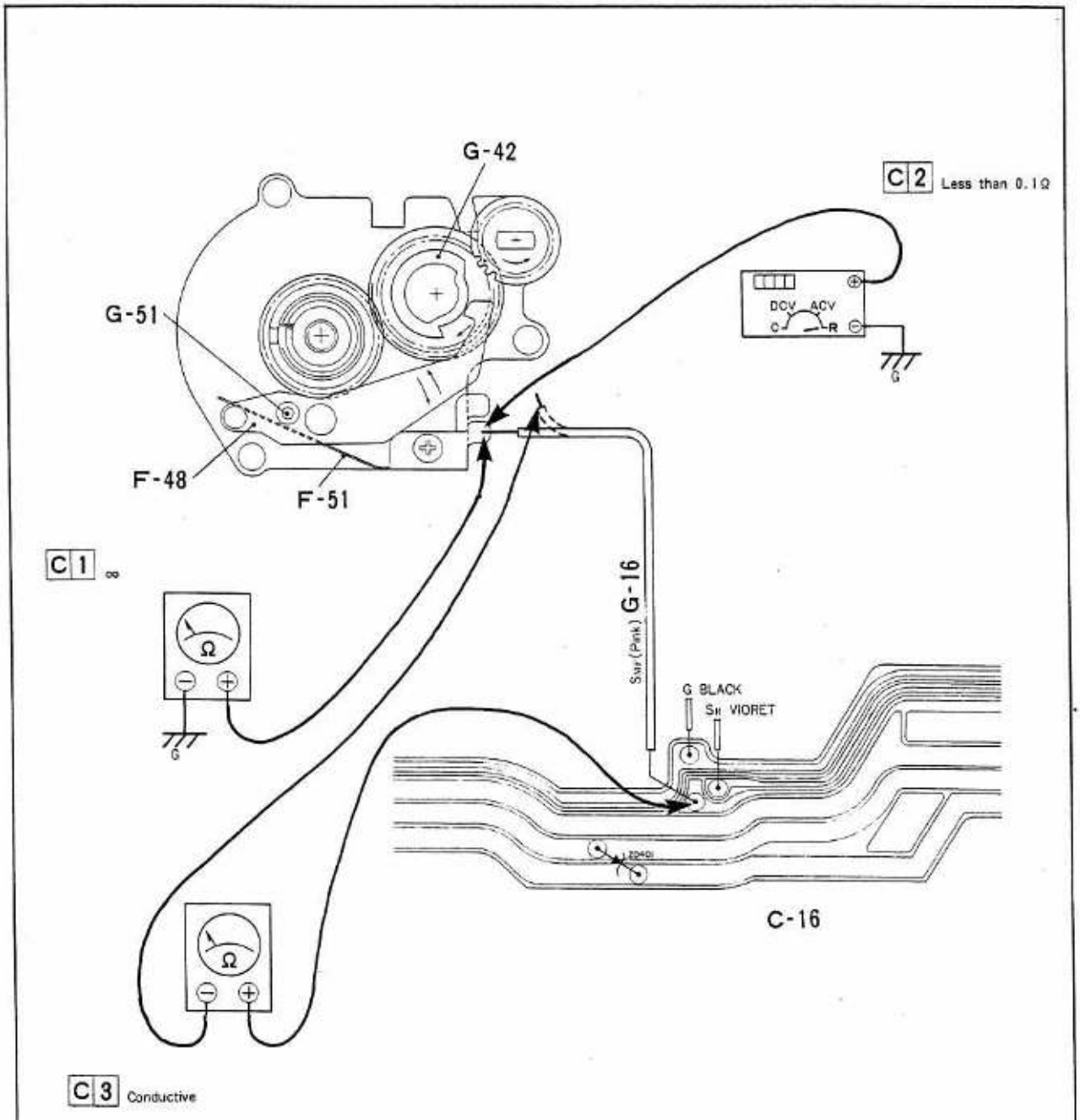

C	Power source	Lead wire	Measuring instrument	Range	Ascertainment
1	Not required	Detach	Tester	Ω	∞
2	Not required	Detach	Digital voltmeter	Ω	Less than 0.1Ω
3	Not required	Detach	Tester	Ω	Conductive

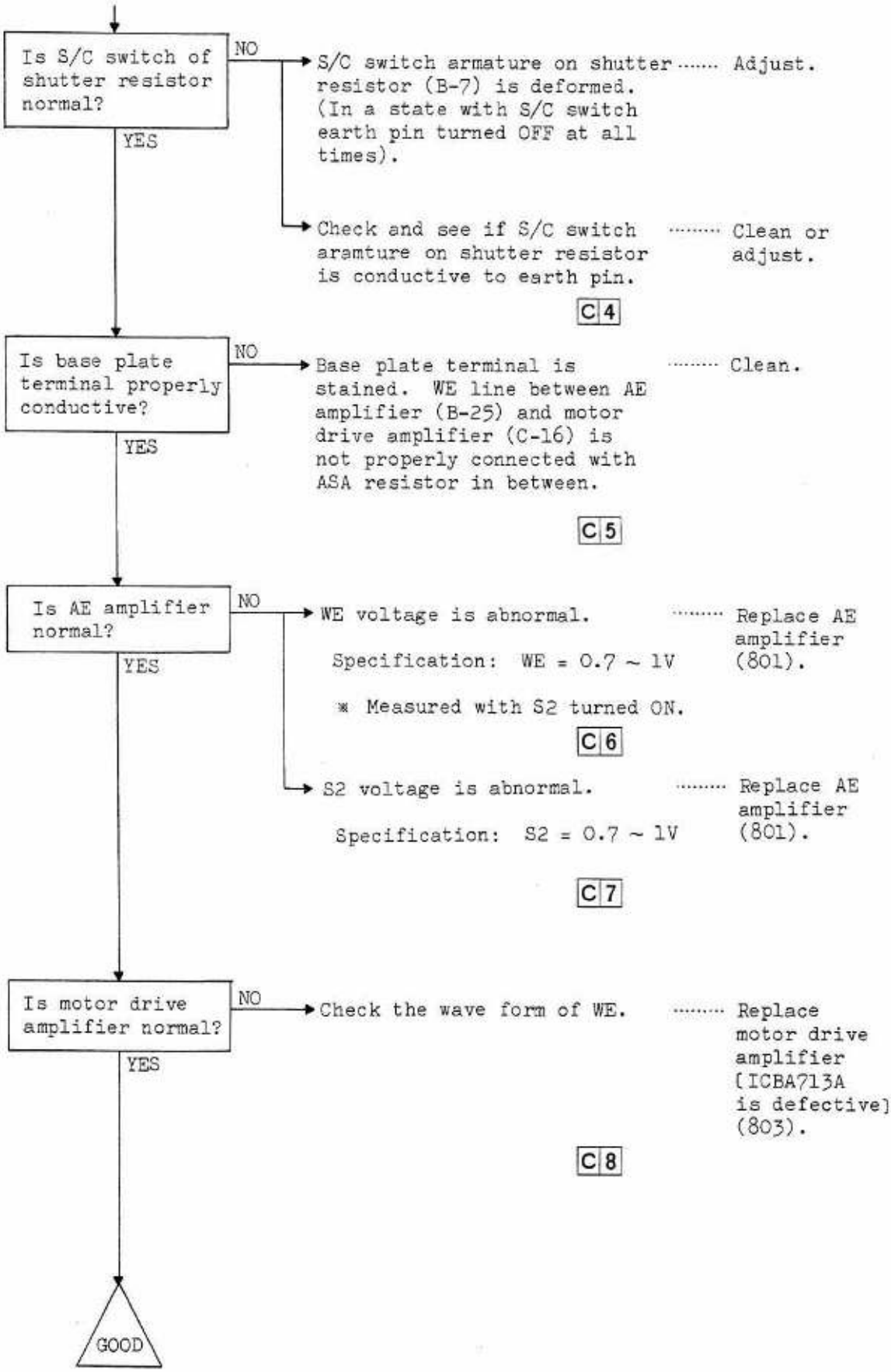
Is S/C switch of shutter resistor normal?
NO
S/C switch armature on shutter resistor (B-7) is deformed. (In a state with S/C switch earth pin turned OFF at all times).
Adjust.
Check and see if S/C switch aramture on shutter resistor is conductive to earth pin.
Clean or adjust.
C 4
YES
Is base plate terminal properly conductive?
NO
Base plate terminal is stained. WE line between AE amplifier (B-25) and motor drive amplifier (C-16) is not properly connected with ASA resistor in between.
Clean.
C 5
YES
Is AE amplifier normal?
NO
WE voltage is abnormal.
Specification: WE = 0.7 ~ 1V
* Measured with S2 turned ON.
Replace AE amplifier (801).
C 6
S2 voltage is abnormal.
Specification: S2 = 0.7 ~ 1V
Replace AE amplifier (801).
C 7
YES
Is motor drive amplifier normal?
NO
Check the wave form of WE.
Replace motor drive amplifier [ICBA713A is defective] (803).
C 8
YES
GOOD

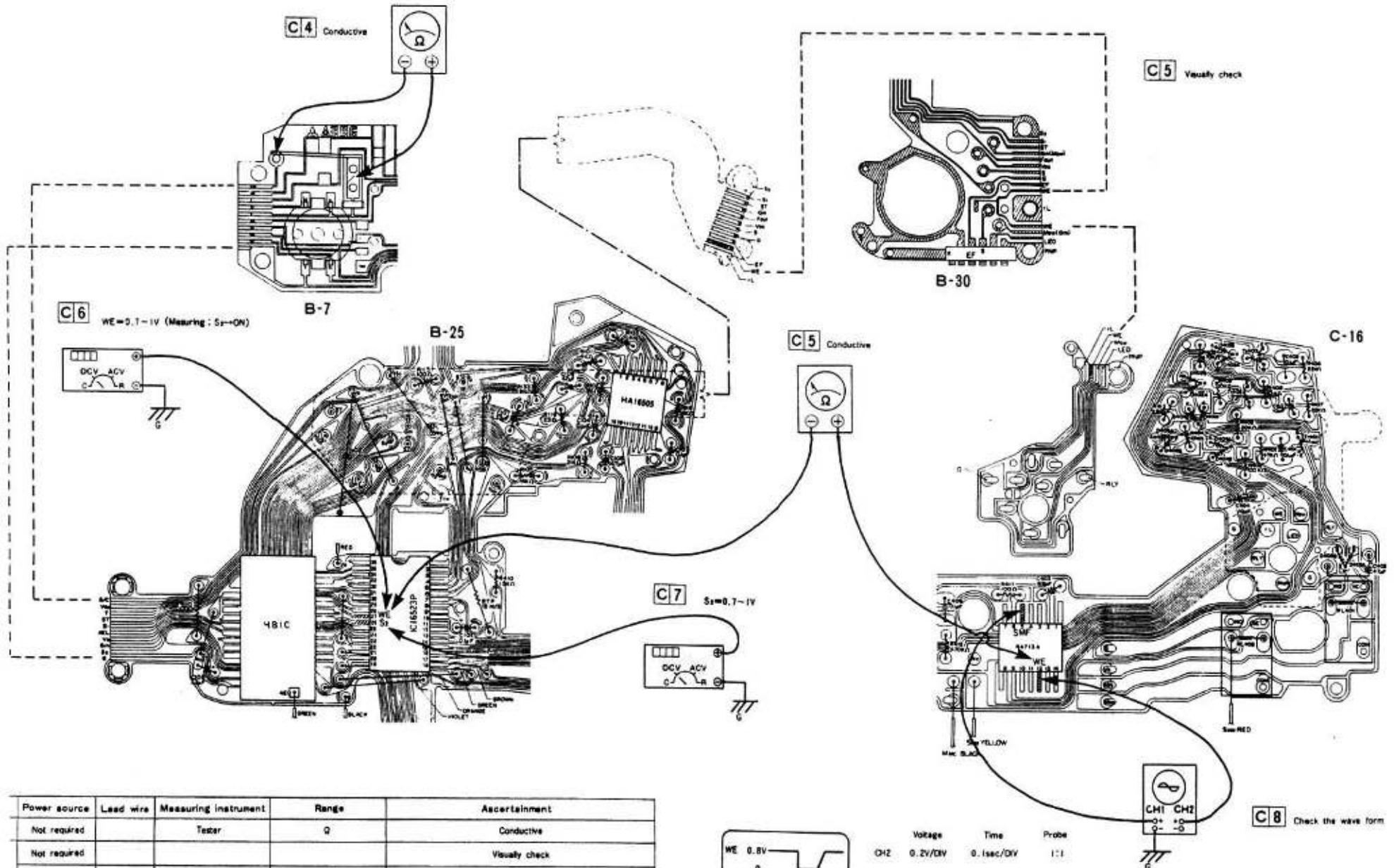

Power source	Lead wire	Measuring instrument	Range	Ascertainment
Not required		Tester	Ω	Conductive
Not required				Visually check
Not required		Tester	Ω	Conductive
Required (6V)		Digital voltmeter	V	WE=0.7~1V (S2→ON)
Required (6V)		Digital voltmeter	V	S2=0.7~1V
Required (6V)		Oscilloscope	CH1 0.2V/DIV 0.1S/DIV CH2 0.2V/DIV 0.1S/DIV	Check the wave form (CH1→1:1 CH2→10:1)

4-2 MIRROR BOX

4-2-1 MIRROR FAILS TO RAISE

Is mirror frame manually flipped up and down in a smoothly?

- NO → When slowly flipped up and down, mirror frame (K-61) does not move in a smoothly. ····· Adjust.

  Lifting out of position or detachment of:

  - Mirror frame supporting plate (K-16)
  - Mirror frame supporting lever A (K-21)
  - Mirror frame supporting lever B (K-22)
  - Mirror frame coupling lever (K-24).

- → Adhesive sticks to 1.4 ø x 5.0 plus counter sunk screw (K-7). ····· Clean.

YES ↓

Are AE amplifier, flexible printed circuit board and release magnet properly connected with one another?

- YES → Release magnet works when terminal No.30 of IC16523P of AE amplifier (B-25) has been short-circuited with ground. ····· Clean or replace release magnet (05540).

  C 1

- → α -signal does not come out of AE amplifier. ····· Replace AE amplifier (801).

  C 2

NO ↓

Is base plate terminal in normal condition?

- NO → AE amplifier (B-25) is not properly connected with flexible printed circuit board (H-45), as base plate terminal is dirty or improper for some reason. ····· Clean.

YES ↓

Is flexible printed circuit board in normal condition?

- NO → There is no conduction between α terminals or between VB terminals of flexible printed circuit board (H-45). ····· Replace F.P.C. plate subassembly (404).

  C 3

YES ↓

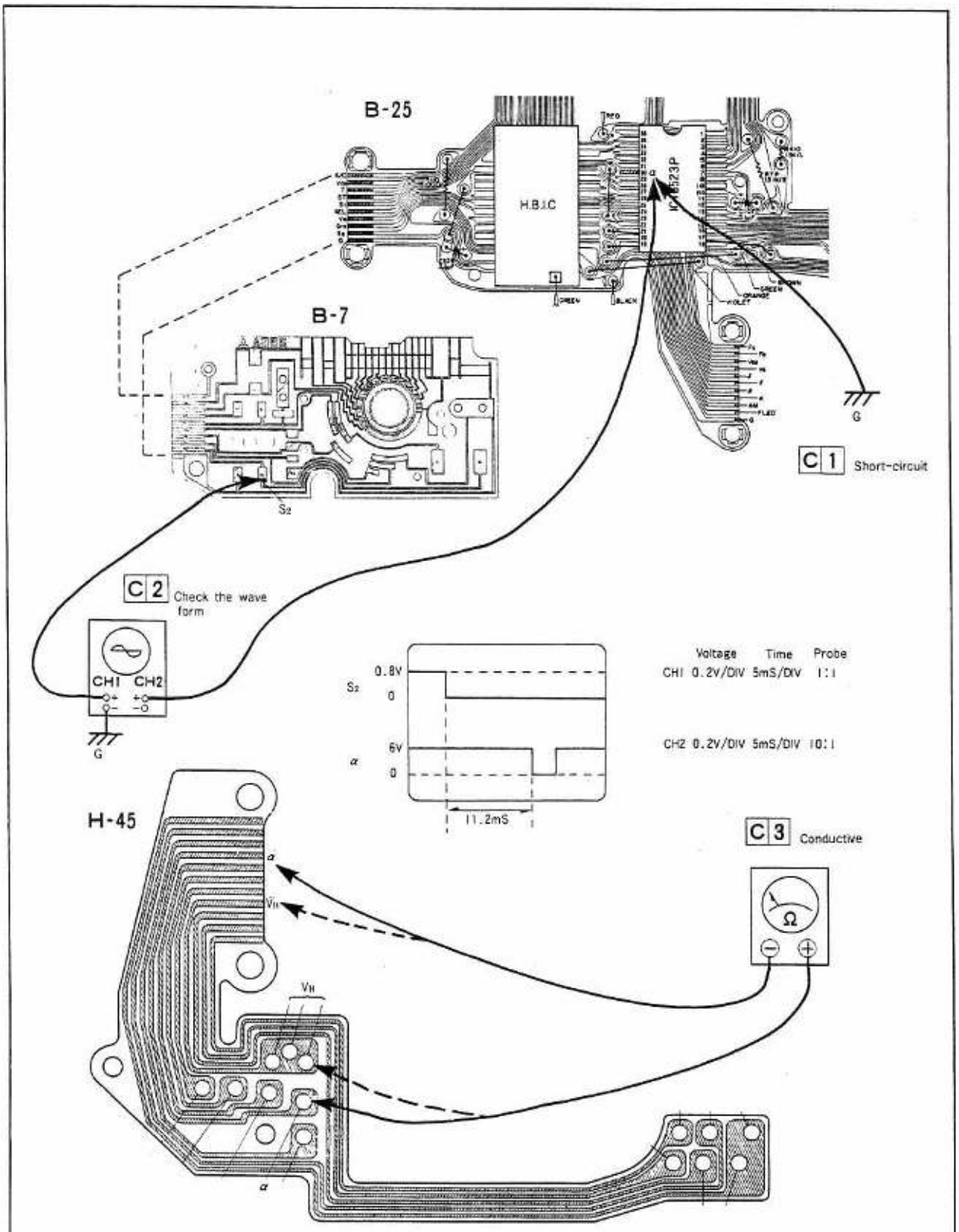

C	Power source	Lead wire	Measuring instrument	Range	Ascertainment
1	Required (6V)				Move the release magnet
2	Required (6V)		Oscilloscope	0.2V/DIV 5mS/DIV	Check the wave form (Probe CH1··· 1:1 CH2···10:1)
3	Not required	Detach	Tester	Ω	Conductive

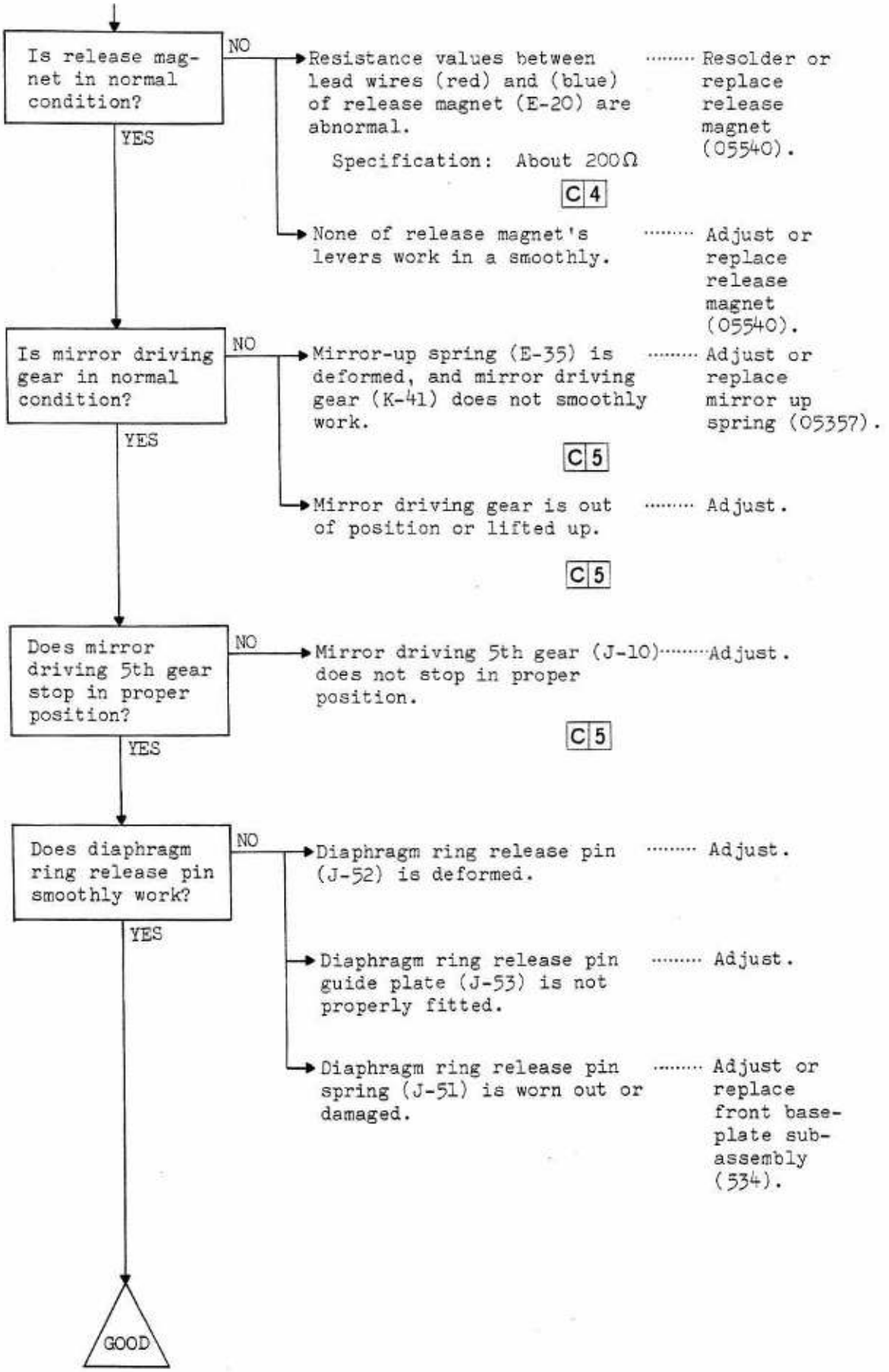
Is release magnet in normal condition?
NO
Resistance values between lead wires (red) and (blue) of release magnet (E-20) are abnormal.
Specification: About 200Ω
C 4
Resolder or replace release magnet (05540).
None of release magnet's levers work in a smoothly.
Adjust or replace release magnet (05540).
YES
Is mirror driving gear in normal condition?
NO
Mirror-up spring (E-35) is deformed, and mirror driving gear (K-41) does not smoothly work.
C 5
Adjust or replace mirror up spring (05357).
Mirror driving gear is out of position or lifted up.
C 5
Adjust.
YES
Does mirror driving 5th gear stop in proper position?
NO
Mirror driving 5th gear (J-10) does not stop in proper position.
C 5
Adjust.
YES
Does diaphragm ring release pin smoothly work?
NO
Diaphragm ring release pin (J-52) is deformed.
Adjust.
Diaphragm ring release pin guide plate (J-53) is not properly fitted.
Adjust.
Diaphragm ring release pin spring (J-51) is worn out or damaged.
Adjust or replace front base-plate sub-assembly (534).
YES
GOOD

C 4 About 200 Ω

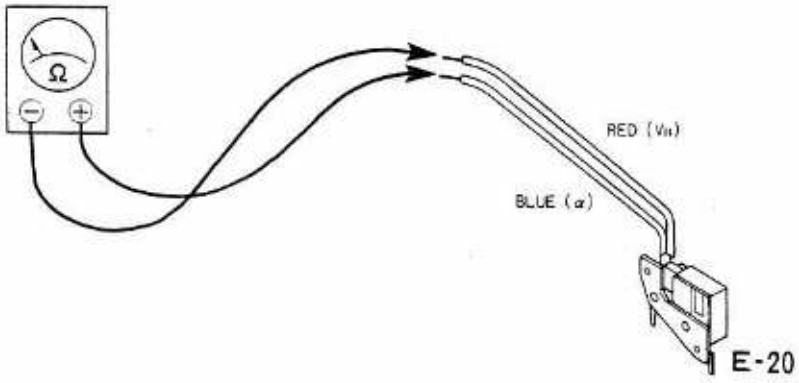

C 5 Visually check

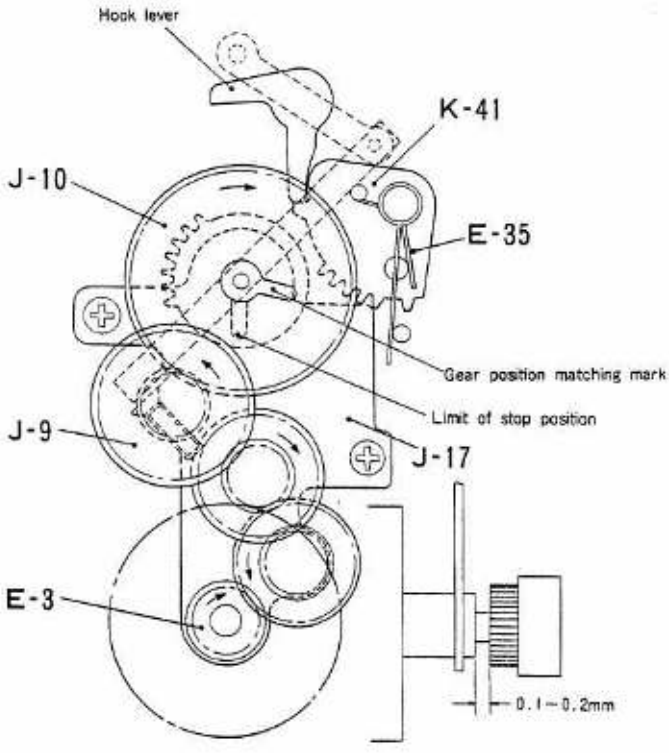

E-5

C	Power source	Lead wire	Measuring instrument	Range	Ascertainment
4	Not required	Detach	Tester	Ω	About 200 Ω
5	Not required				Visually check

4-2-2-1 MIRROR REMAINS FLIPPED UP

Factor: Diaphragm ring in initial position.
Shutter set.

Is mirror fixing spring hooked?

- NO → Mirror fixing spring (E-40) is deformed or comes out of position. ····· Adjust or replace mirror fixing spring (05358). C1
- YES ↓

Is mirror-up spring hooked?

- NO → Mirror-up spring (E-35) comes out of position or is broken. ····· Adjust or replace mirror-up spring (05357). C1
- YES ↓

Is mirror box motor stopped in proper position?

- NO → Mirror-driving 5th gear (J-10) does not stop proper position under gear position mark. ····· Adjust. Refer to "Mirror box motor doesn't stop." (4-2-7) C1
- YES ↓

Does mirror frame smoothly go up and down?

- NO → When mirror frame is manually moved up and down at a slow pace, it does not smoothly move due to a deformation of: ····· Adjust.
  - Mirror frame supporting plate (K-16),
  - Mirror frame supporting lever A (K-21),
  - Mirror frame supporting lever B (K-22),
  - Mirror frame coupling lever (K-24).
- YES ↓

Does the series of mirror driving cogwheels smoothly rotate?

- NO → Mirror driving 1st gear (E-3) is not properly fitted to mirror box motor (L-57). ····· Adjust. C1
- NO → Check and see if mirror driving 1st gear, mirror driving 2nd gear (J-12), mirror driving 3rd gear (J-11), mirror driving 4th gear (J-9) and mirror driving 5th gear (J-10) are worn out. ····· Adjust or replace mirror driving gear baseplate subassembly (530). C1
- YES ↓

C 1 Visually check

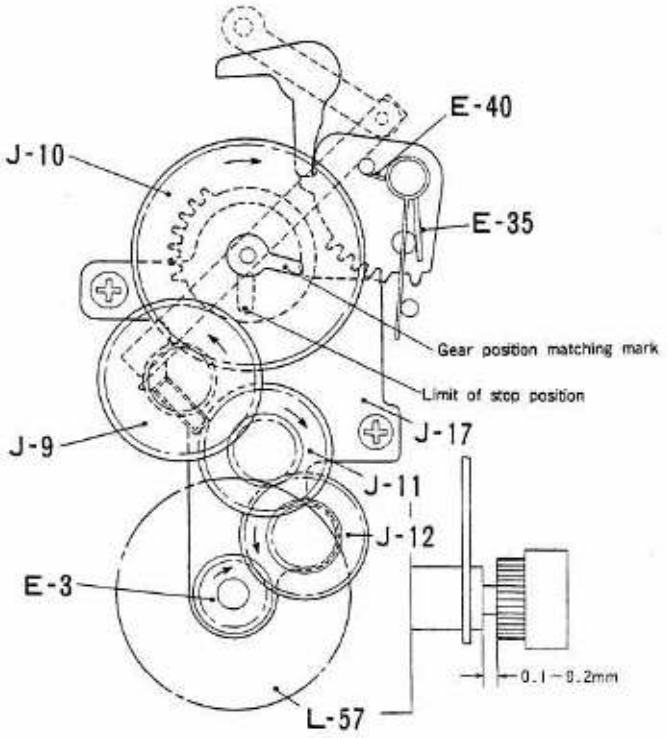

E-5

C	Power source	Lead wire	Measuring instrument	Range	Ascertainment
1	Not required				Visually check

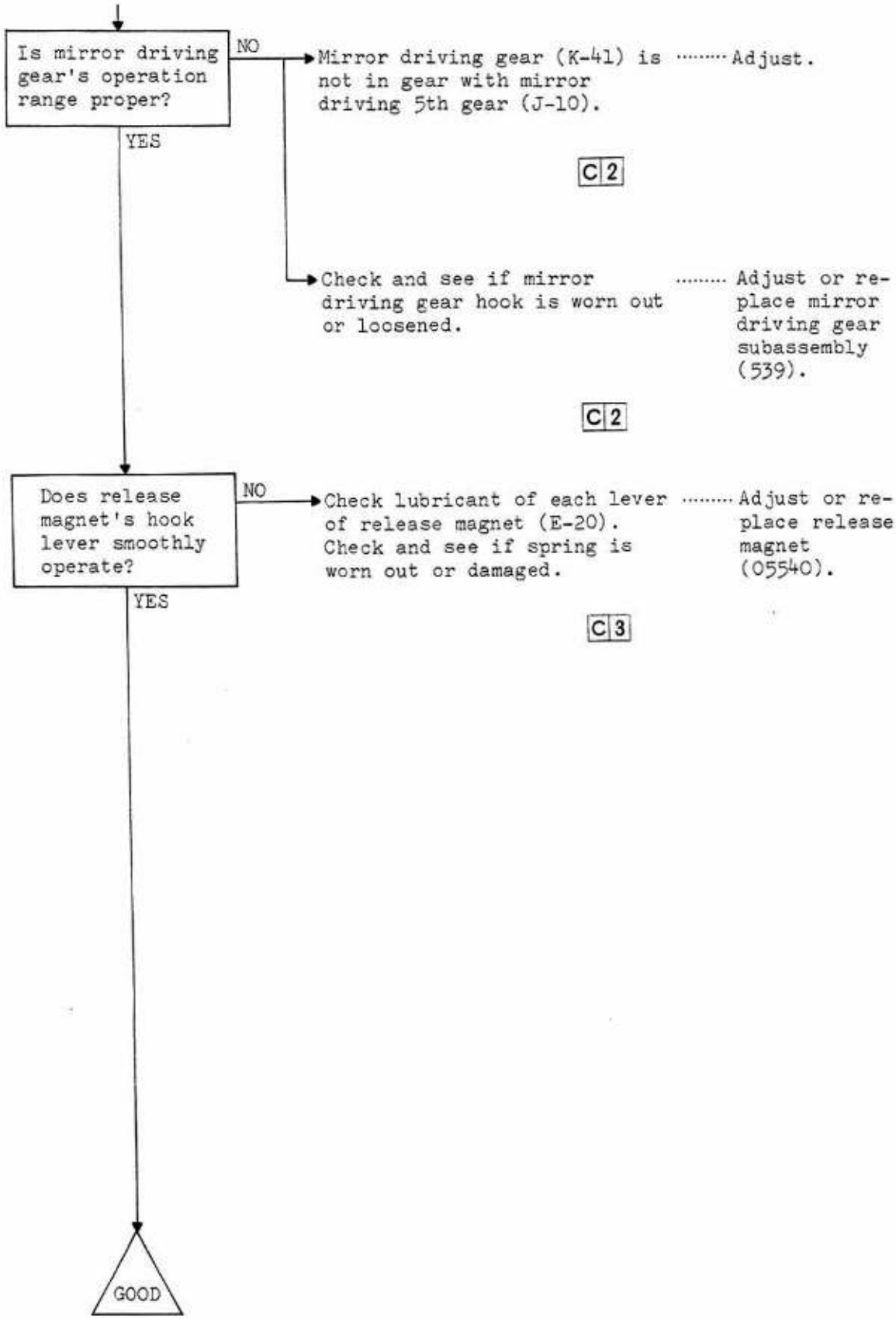
Is mirror driving gear's operation range proper?
NO
Mirror driving gear (K-41) is not in gear with mirror driving 5th gear (J-10).
Adjust.
C 2
Check and see if mirror driving gear hook is worn out or loosened.
Adjust or replace mirror driving gear subassembly (539).
C 2
YES
Does release magnet's hook lever smoothly operate?
NO
Check lubricant of each lever of release magnet (E-20). Check and see if spring is worn out or damaged.
Adjust or replace release magnet (05540).
C 3
YES
GOOD

C 2 Visually check

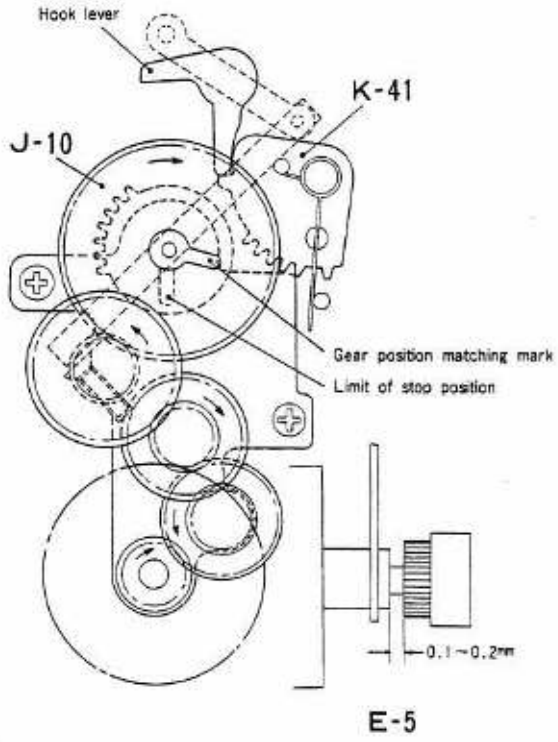

C 3 Key point of adjustment

1) Check of Release Magnet
   - When a voltage of DC5.0V is momentarily added (red···⊕, light blue···⊖), in a situation where hook lever spring ① is depressed about 40° in the direction of the arrow movable plate lever ② must operate.
   - When hook lever spring ① is set free without conduction, the movable plate lever must be attracted to the magnet.
     Attracting power : more than 200g at the tip of movable plate lever.
2) When the release magnet is turned on (red···⊕, light blue···⊖, at DC5.0V), the release magnet works smoothly with the diaphragm ring and the mirror, and when the mirror is flipped up, the movable plate must be attracted to the magnet by the force of a spring.

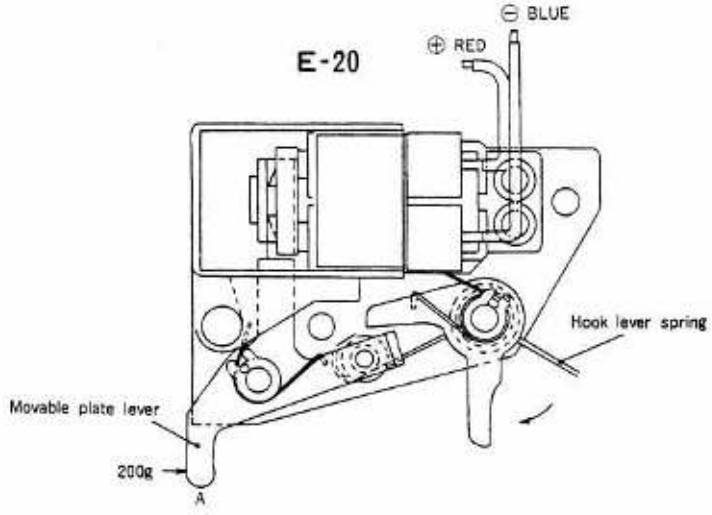

C	Power source	Lead wire	Measuring instrument	Range	Ascertainment
2	Not required				Visually check
3	Required (5V)	Detach	Tension gauge		More than 200g

4-2-2-2 MIRROR REMAINS FLIPPED UP

Factor: Diaphragm unreturnable to original position. shutter set.

Is release magnet's operation proper?

- NO → When hook lever spring has been released without electric flow, movable lever does not stick. Absorptive power is less than 200g tip of movable lever. ····· Clean or replace release magnet (05540).

C 1

- YES ↓

Does mirror box motor stop at proper point?

- NO → Mirror box motor does not stop at proper point. ····· Refer to "Mirror box motor does not stop (4-2-7)."

C 2

- YES ↓

GOOD

C 1

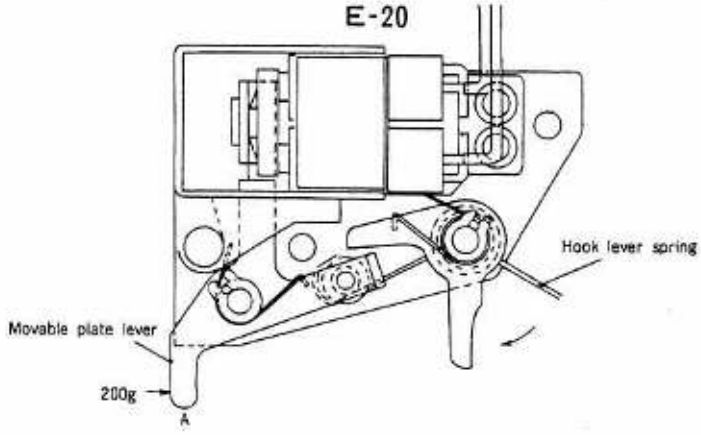

C 2 Visually check

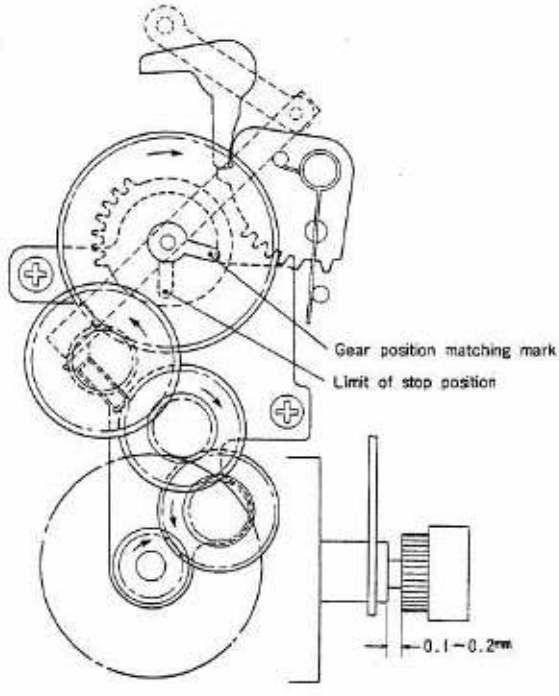

E-5

C	Power source	Lead wire	Measuring instrument	Range	Ascertainment
1	Not required				Check the operation
2	Not required				Visually check

4-2-2-3 MIRROR REMAINS FLIPPED UP

Factor: Diaphragm ring unreturnable.
Shutter not set (Mirror box motor does not turn).

Does shutter's rear plane perfectly run?

- NO → Rear plane of shutter (H-41) does not running to rear plane signal not flow out. ····· Refer to "Shutter can not be opened or remains opened." (4-3-2)
- YES ↓

Is rear plane information switch turned ON?

- NO → Rear plane switch of diaphragm magnet (E-23) does not turned ON when shutter's rear plane has finished running. ····· Adjust the way diaphragm magnet is fitted and adjust rear plane information switch.

  Specification:

  Contact resistance

  less than 0.1 Ω

  C 1

- NO → SMM1 lead wire (black, E-47) is not conductive between rear plane information switch and mirror box motor switch (L-19). ····· Resolder or replace lead wire (08114).

  C 2

- YES ↓

Is SMM2 ground lead wire conductive?

- NO → SMM2 ground lead wire (gray, L-34) is not conductive between mirror box switch contact plate B (L-39) and AM minus contact plate. ····· Resolder or replace lead wire (08130).

  C 3

- YES ↓

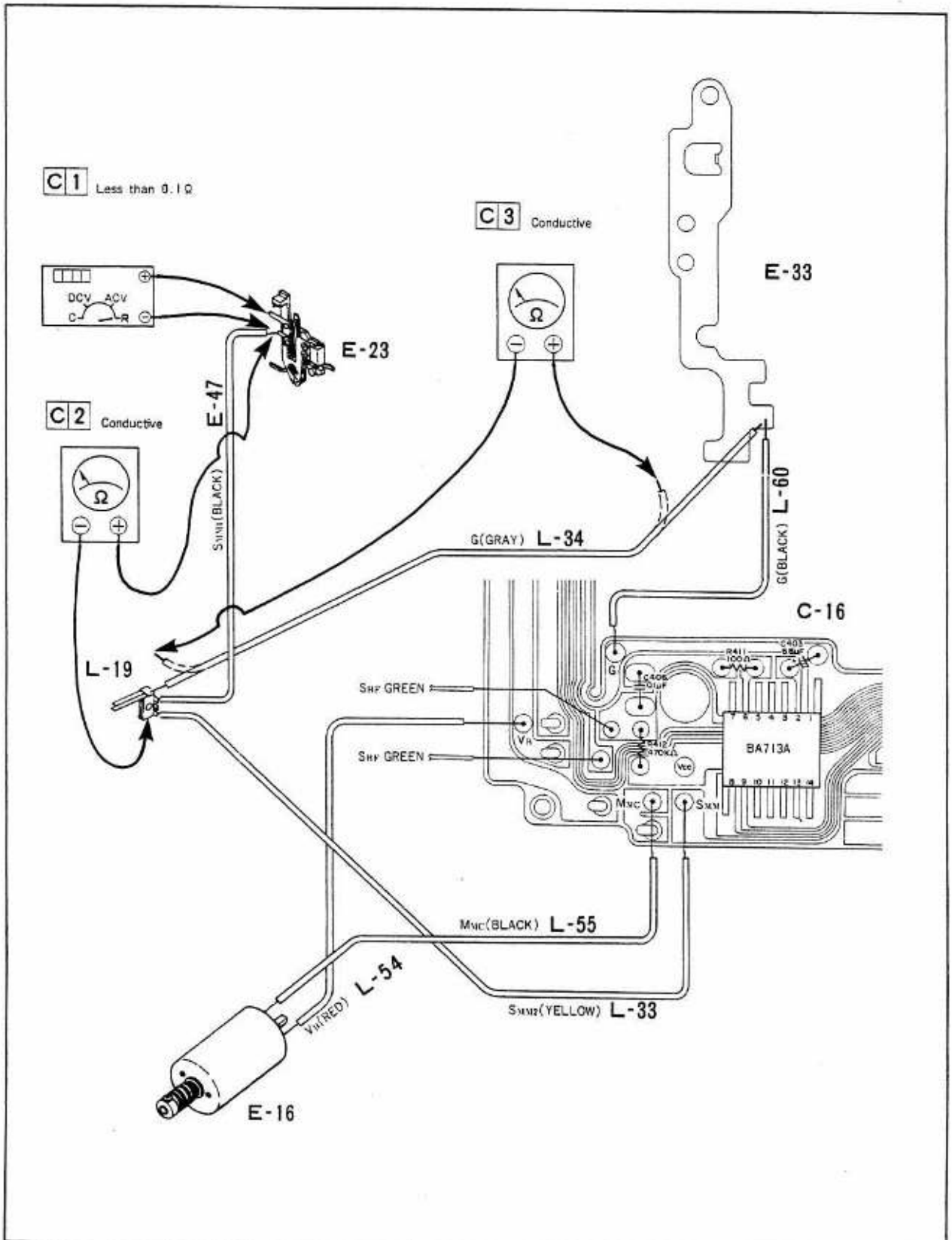

C	Power source	Lead wire	Measuring instrument	Range	Ascertainment
1	Not required	Detach	Digital voltmeter	Ω	Less than 0.1Ω
2	Not required		Tester	Ω	Conductive
3	Not required	Detach	Tester	Ω	Conductive

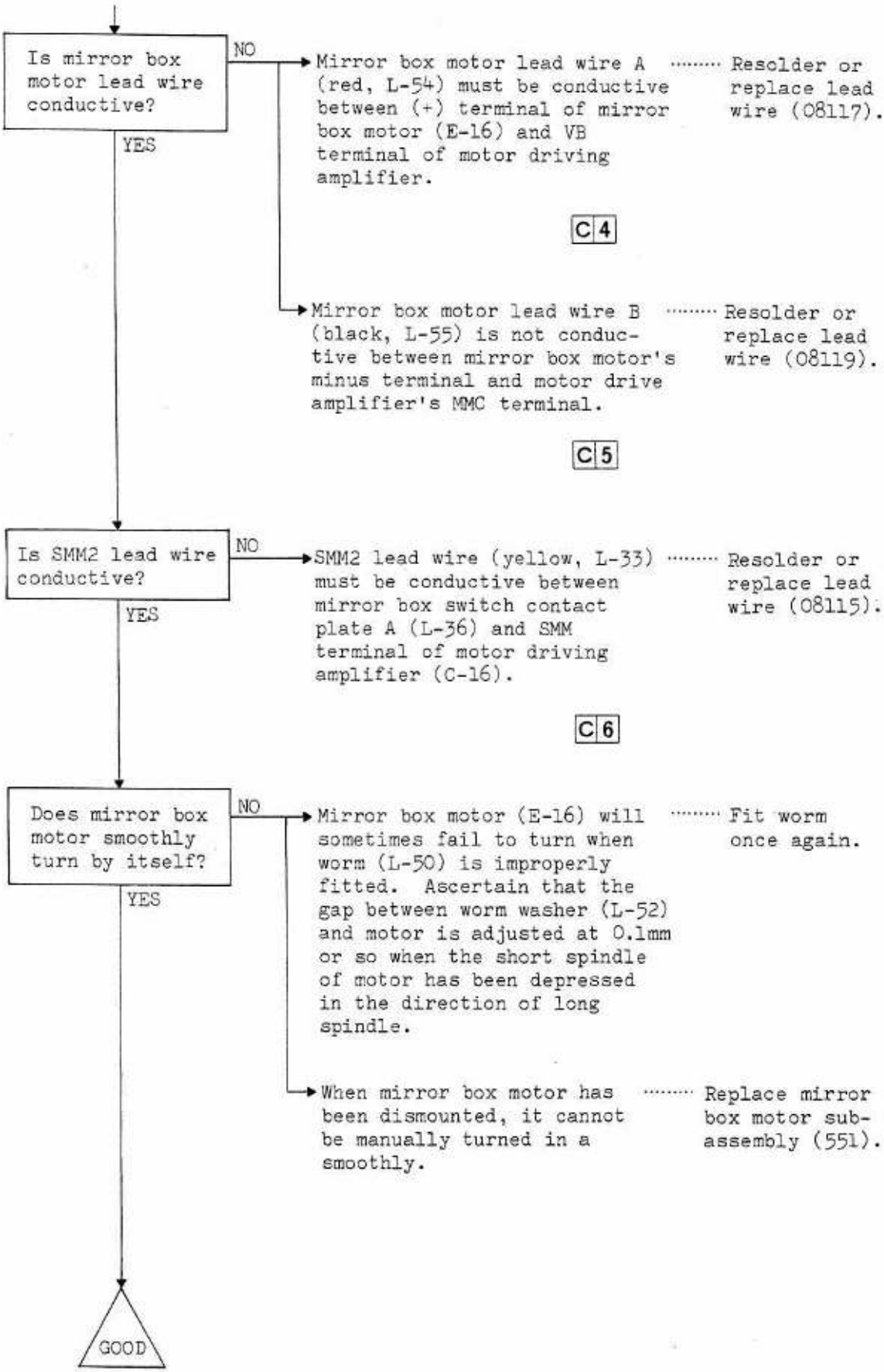
Is mirror box motor lead wire conductive?
NO
YES
Mirror box motor lead wire A (red, L-54) must be conductive between (+) terminal of mirror box motor (E-16) and VB terminal of motor driving amplifier.
Resolder or replace lead wire (08117).
C 4
Mirror box motor lead wire B (black, L-55) is not conductive between mirror box motor's minus terminal and motor drive amplifier's MMC terminal.
Resolder or replace lead wire (08119).
C 5
Is SMM2 lead wire conductive?
NO
YES
SMM2 lead wire (yellow, L-33) must be conductive between mirror box switch contact plate A (L-36) and SMM terminal of motor driving amplifier (C-16).
Resolder or replace lead wire (08115).
C 6
Does mirror box motor smoothly turn by itself?
NO
YES
Mirror box motor (E-16) will sometimes fail to turn when worm (L-50) is improperly fitted. Ascertain that the gap between worm washer (L-52) and motor is adjusted at 0.1mm or so when the short spindle of motor has been depressed in the direction of long spindle.
Fit worm once again.
When mirror box motor has been dismounted, it cannot be manually turned in a smoothly.
Replace mirror box motor sub-assembly (551).
GOOD

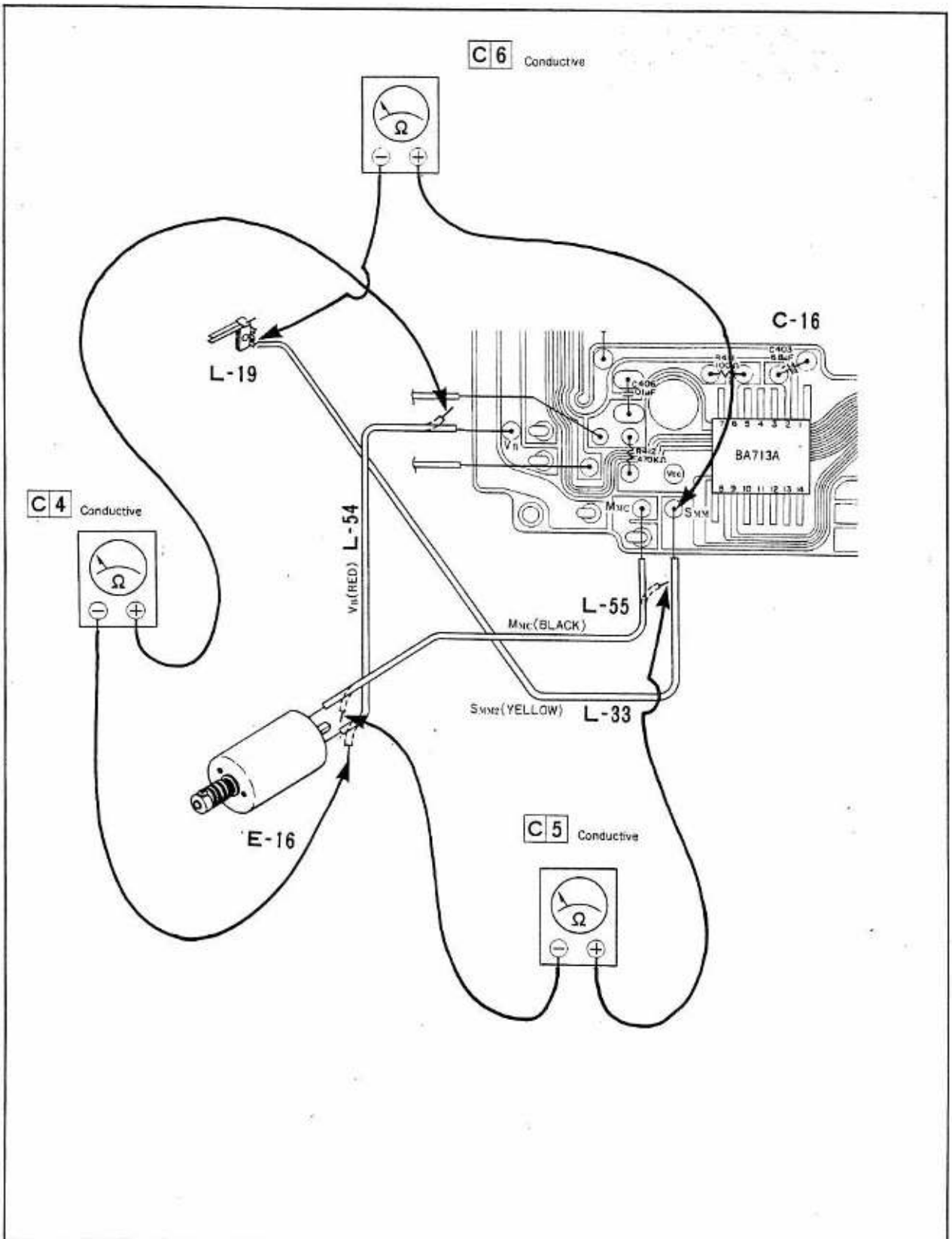

C	Power source	Lead wire	Measuring instrument	Range	Ascertainment
4	Not required	Detach	Tester	Ω	Conductive
5	Not required	Detach	Tester	Ω	Conductive
6	Not required		Tester	Ω	Conductive

4-2-2-4 **MIRROR REMAINS FLIPPED UP**

Factor: Diaphragm ring unreturnable.
Shutter opened.

Refer to "Shutter does not, or remains open (4-3-2)."

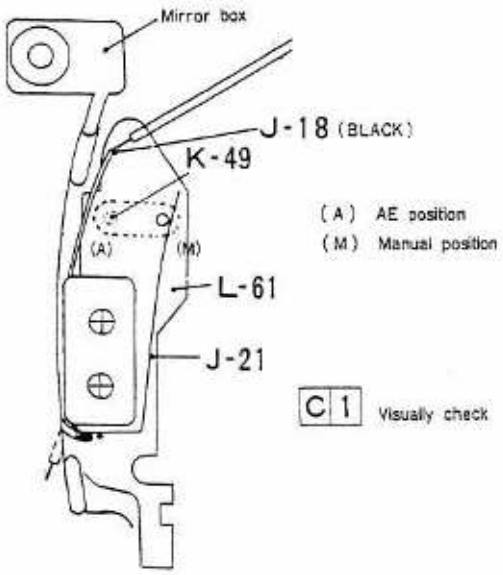

(A) AE position
(M) Manual position

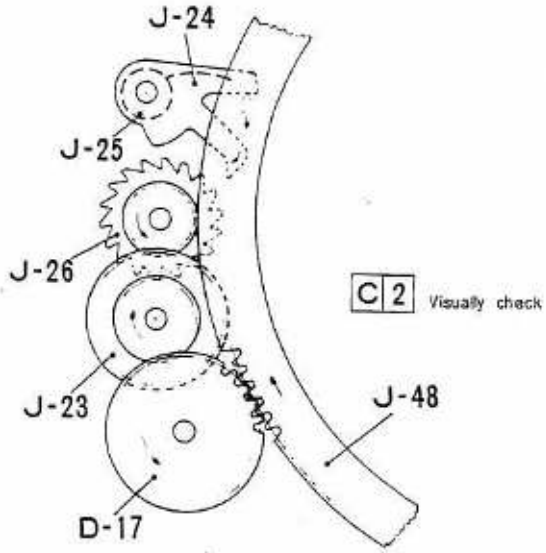

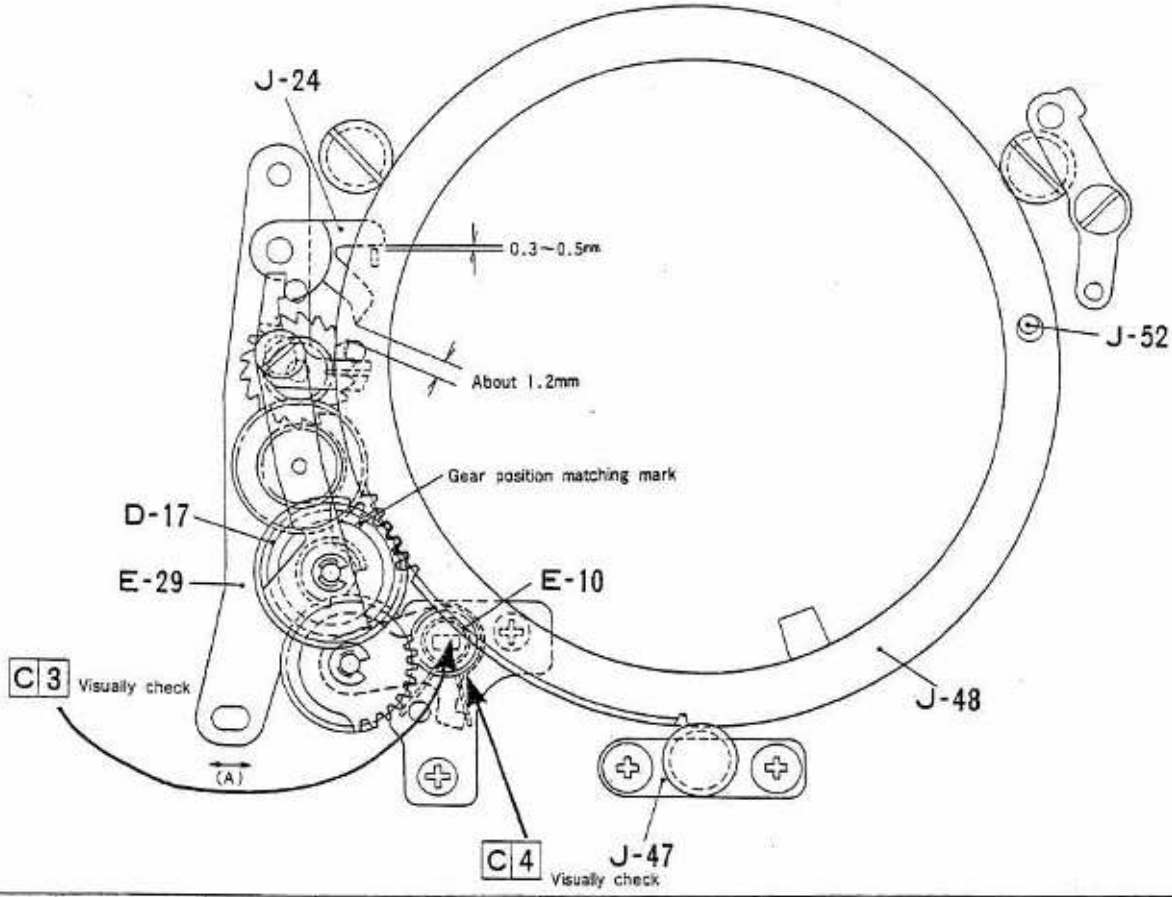

C	Power source	Lead wire	Measuring instrument	Range	Ascertainment
1	Not required				Visually check
2	Not required				Visually check
3	Not required				Don't deformed small hole
4	Not required				smoothly operating

4-2-3 **LENS IS ALWAYS SET TO SMALLEST APERTURE IN AE MODE**

Does auto-manual changeover switch properly operate?

- NO → Auto-manual changeover switch contact plate (J-21) does not come out of alignment with auto-manual contact pin (K-49) in AE mode. ····· Adjust switch and refer to "M-LED flickers with 1st step depression of release button in AE mode." (4-4-7).

  C 1

- NO → Auto-manual changeover switch contact plate is short-circuited with mirror box. ····· Adjust.

- NO → AM lead wire (black, J-18) is short-circuited with body. ····· Resolder or replace AM lead wire (08118).

- YES ↓

Is stop claw spring in normal condition?

- NO → Check and see if stop claw spring (J-25) comes out of position or is broken or worn out. ····· Hook once again or replace spring (05323).

  C 2

- YES ↓

Is base plate terminal in normal condition?

- NO → AE amplifier (B-25) is not properly connected with flexible printed circuit board (H-45), as base plate terminal is dirty or improper for some reason. ····· Clean.

- YES ↓

Is diaphragm ring brought back to original position?

- NO → Small hole of diaphragm ring driving small gear (E-10) is drformed. ····· Replace diaphragm ring driving small gear (05488) and refer to "Diaphragm ring is unreturnable to original position." (4-2-6)

  C 3

- NO → Operation of diaphragm ring driving gear baseplate subassembly (E-14) is considerably heavy. ····· Adjust or replace diaphragm ring driving baseplate subassembly (548).

  C 4

- YES ↓

Is AE amplifier in normal condition?

NO → FLED, FS, and β terminals of Hybrid IC and IC16523P of AE amplifier (B-25) are lifted up or come out of position. ····· Resolder.

C 5

→ Wave form of AE amplifier's FS terminal is abnormal. ····· Replace AE amplifier (801). [Hybrid IC defective].

C 6

→ Wave form of β terminal of AE amplifier is abnormal ····· Replace AE amplifier (801). [IC16523P defective].

C 7

YES

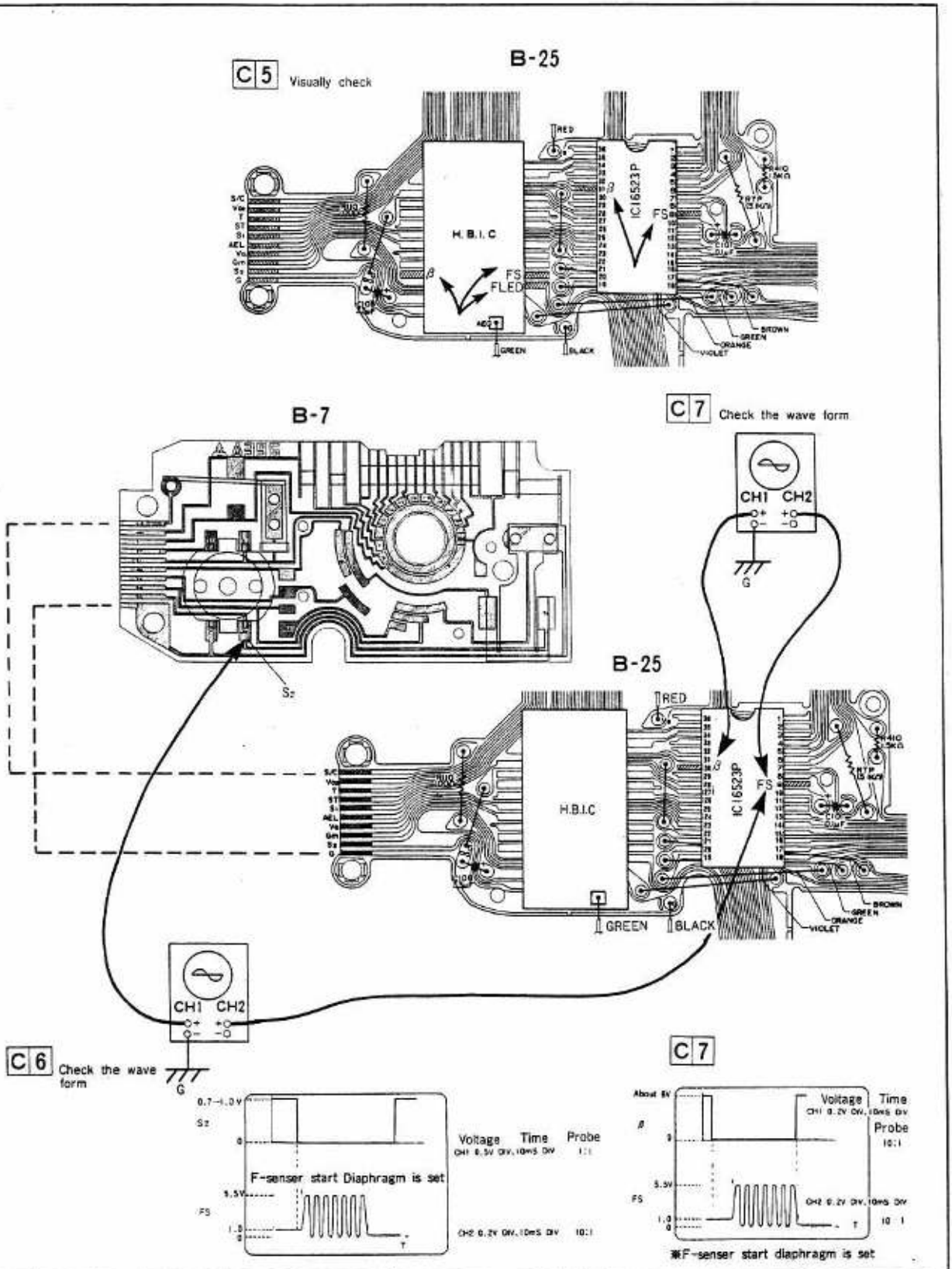

C	Power source	Lead wire	Measuring instrument	Range	Ascertainment
5	Not required				Visually check
6	Required (6V)		Oscilloscope	CH1 0.5V/DIV, 10mS/DIV CH2 0.2V/DIV, 10mS/DIV	Check the wave form (Probe 1:1) Check the wave form (Probe 10:1)
7	Required (6V)		Oscilloscope	CH1 0.2V/DIV, 10mS/DIV CH2 0.2V/DIV, 10mS/DIV	Check the wave form (Probe 10:1) Check the wave form (Probe 10:1)

Resistance value of diaphragm magnet (E-23) is abnormal. ····· Resolder or replace diaphragm magnet (05550).

Specification = About 300 Ω

C 8

Is wiring of F senser's LED and photo-transistor normal?

NO

F-senser lead wire C (Broun J-38) is not conductive between (+) terminal of photo-transistor (J-39) and FS terminal of flexible printed circuit board (H-45). ····· Resolder or replace lead wire C (08112).

C 9

F-senser lead wire A (Yellow J-37) is not conductive between (-) terminal of photo-transistor and G terminal of flexible printed circuit board. ····· Resolder or replace lead wire C (08110).

C 10

F-senser lead wire D (Red J-35) is not conductive between (-) terminal of LED (J-36) and FLED terminal of flexible printed circuit board. ····· Resolder or replace lead wire D (08113).

C 11

F-senser lead wire (Gray J-34) is not conductive between (+) terminal of LED and G terminal of flexible printed circuit board. ····· Resolder or replace lead wire (08111).

C 12

YES

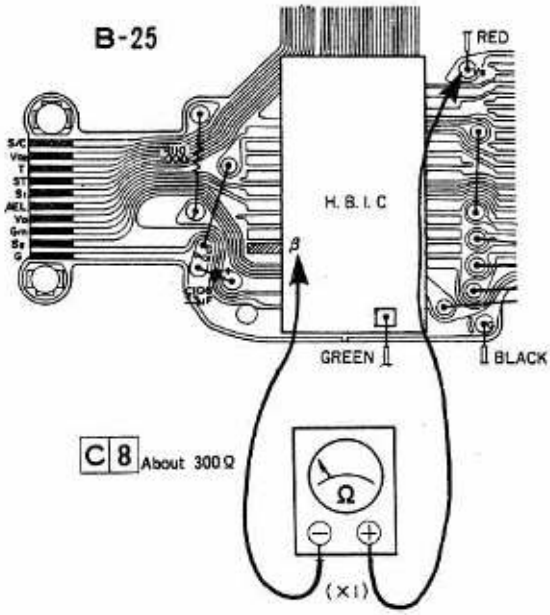

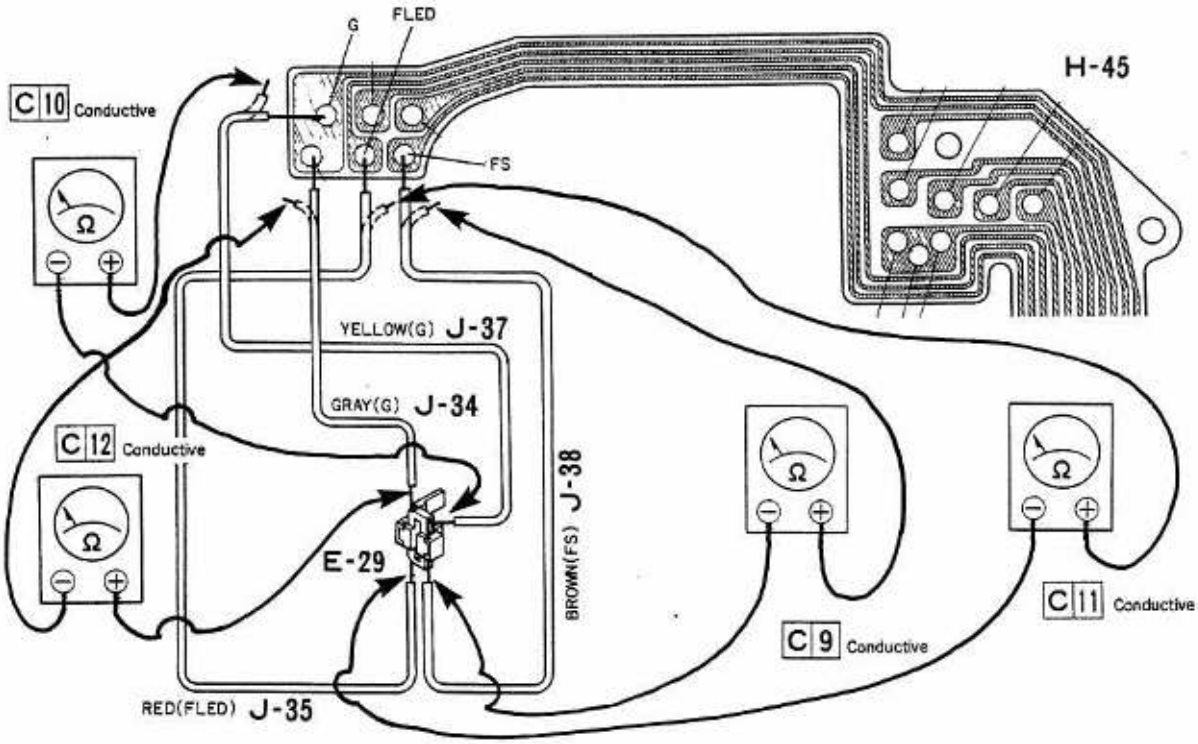

C	Power source	Lead wire	Measuring instrument	Range	Ascertainment
8	Not required		Tester	Ω (×1)	About 300 Ω
9	Not required	Detach	Tester	Ω	Conductive
10	Not required	Detach	Tester	Ω	Conductive
11	Not required	Detach	Tester	Ω	Conductive
12	Not required	Detach	Tester	Ω	Conductive

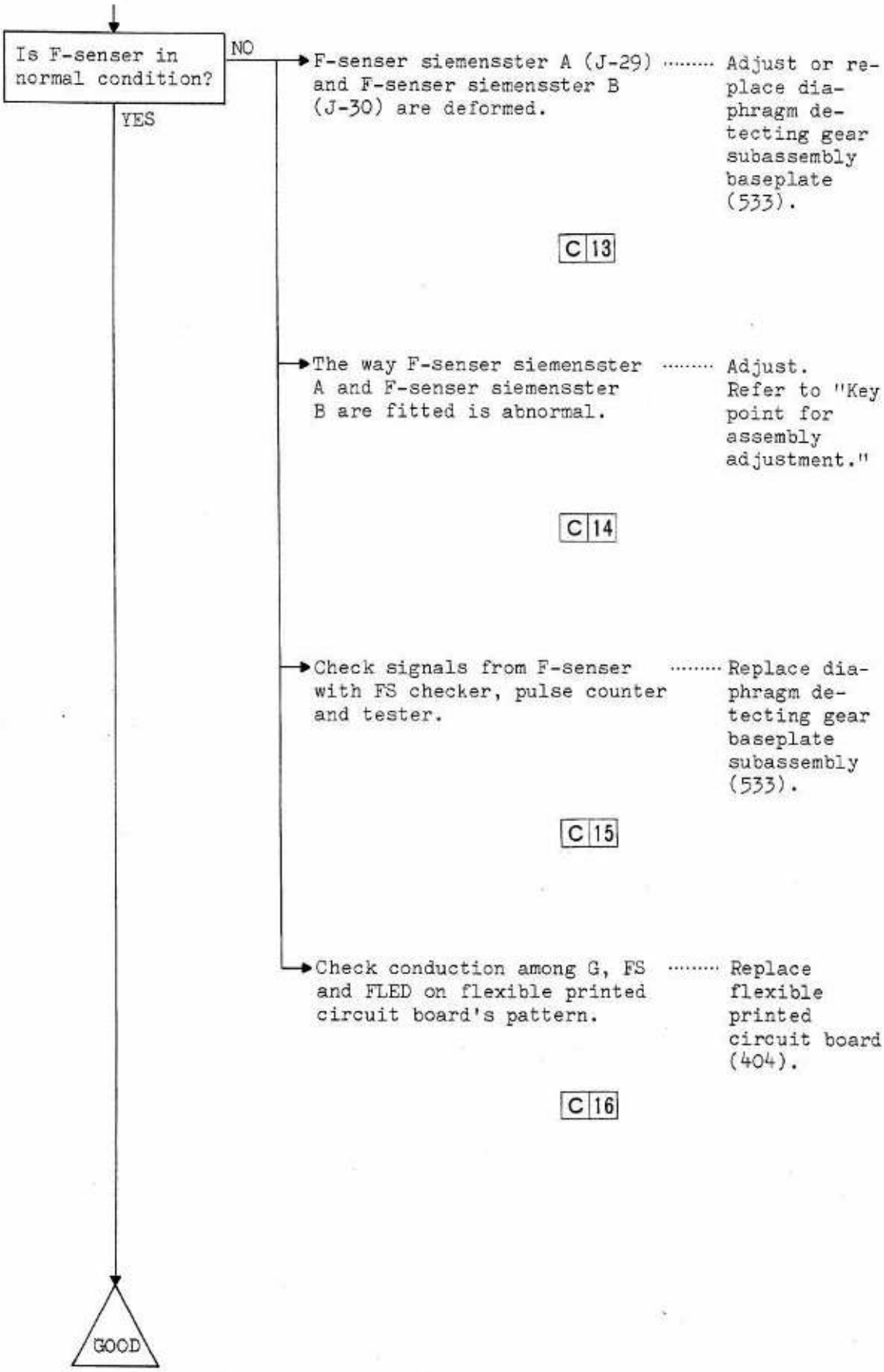
Is F-senser in normal condition?
NO
YES
F-senser siemensster A (J-29) and F-senser siemensster B (J-30) are deformed.
Adjust or replace diaphragm detecting gear subassembly baseplate (533).
C 13
The way F-senser siemensster A and F-senser siemensster B are fitted is abnormal.
Adjust. Refer to "Key point for assembly adjustment."
C 14
Check signals from F-senser with FS checker, pulse counter and tester.
Replace diaphragm detecting gear baseplate subassembly (533).
C 15
Check conduction among G, FS and FLED on flexible printed circuit board's pattern.
Replace flexible printed circuit board (404).
C 16
GOOD

C13
C14

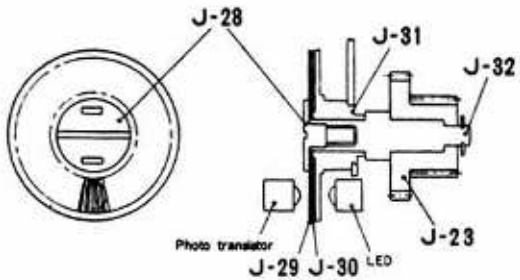

C13 C14 Key points of adjustment

(1) F-senser Siemensster A (J-29) must be securely fixed by Siemensster set screw (J-28) and F-senser Siemensster B (J-29) by F-senser gear shaft bearing metal (J-31).
(2) Siemensster set screw (J-28) must be securely fixed to F-senser gear shaft (J-32) to transmit the rotation of F-senser gear (J-23).
(3) F-senser Siemensster A and B must be placed in paralle to each other and three must be a gap of about 0.2±0.1mm.
(4) Note that the F-senser Siemehsters are easy to deform.

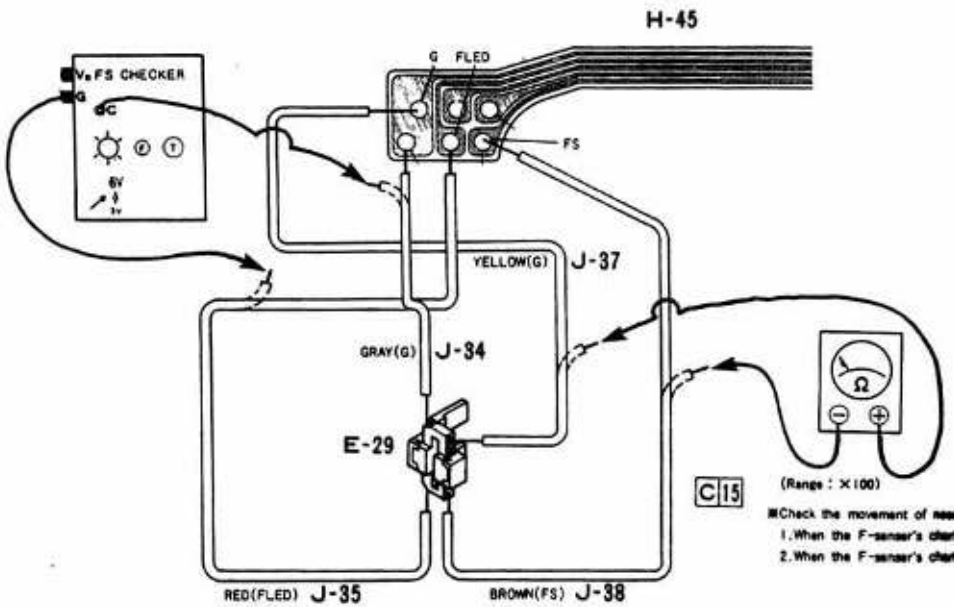

C15

(Range : ×100)

※Check the movement of needle rotating the siemensster by hand
1.When the F-senser's chart opened : Less than 1KΩ
2.When the F-senser's chart closed : More than 100KΩ

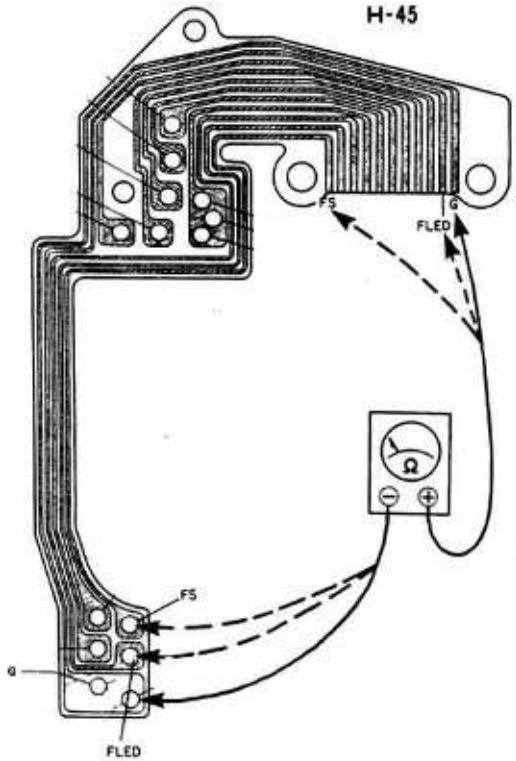

C16 Conductive

C	Power source	Lead wire	Measuring instrument	Range	Ascertainment
13					Visually check
14					Visually check
15	Not required	Detach	tester FS checker	Ω(×100) Vos(2.8V)	When the F-senser's chart opened : Less than 1KΩ When the F-senser's chart closed : More than 100KΩ
16	Not required	Detach	tester	Ω	Conductive

4-2-4 **LENS IS ALWAYS SET TO LARGEST APERTURE IN AE MODE**

Is diaphragm ring brought back to original position?

- NO → Diaphragm ring release pin (J-52) does not fall into the hole of diaphragm ring (J-48). ····· Refer to "Diaphragm ring is unreturnable to original position." (4-2-6).

C 1

- YES ↓

Is diaphragm ring driving spring hooked?

- NO → Check and see if diaphragm ring driving spring (D-18) is deformed. ····· Adjust or replace diaphragm ring driving spring (05372).

C 2

- YES ↓

Does diaphragm ring turn?

- NO → Diaphragm ring (D-17) does not smoothly rotate when diaphragm detecting gear (D-21) has been put out of gear. ····· Adjust. Refer to "3-2-5-5 Key points for assembly adjustment."
- NO → Release magnet (E-20) does not go into action when 5V is impressed on the release magnet lead wires (red) and (blue). ····· Replace release magnet (05540).

C 3

- YES ↓

Is there any gap between diaphragm magnet lever and stop claw?

- NO → When diaphragm ring (J-48) is in initial position, the gap between diaphragm magnet lever (E-23) and stop claw (J-24) is not about 0.3 ~ 0.5mm. ····· Adjust.

C 4

- YES ↓

Is diaphragm ring driving small gear normal in shape?

- NO → Small hole of diaphragm ring driving small gear (E-10) is deformed. ····· Replace diaphragm ring driving small gear (05488).

C 5

- YES ↓

Is base plate terminal conductive?

- NO → AE amplifier (B-25) is not properly connected with flexible printed circuit board (H-45), as base plate terminal is dirty or improper for some reason. ····· Clean.
- YES ↓

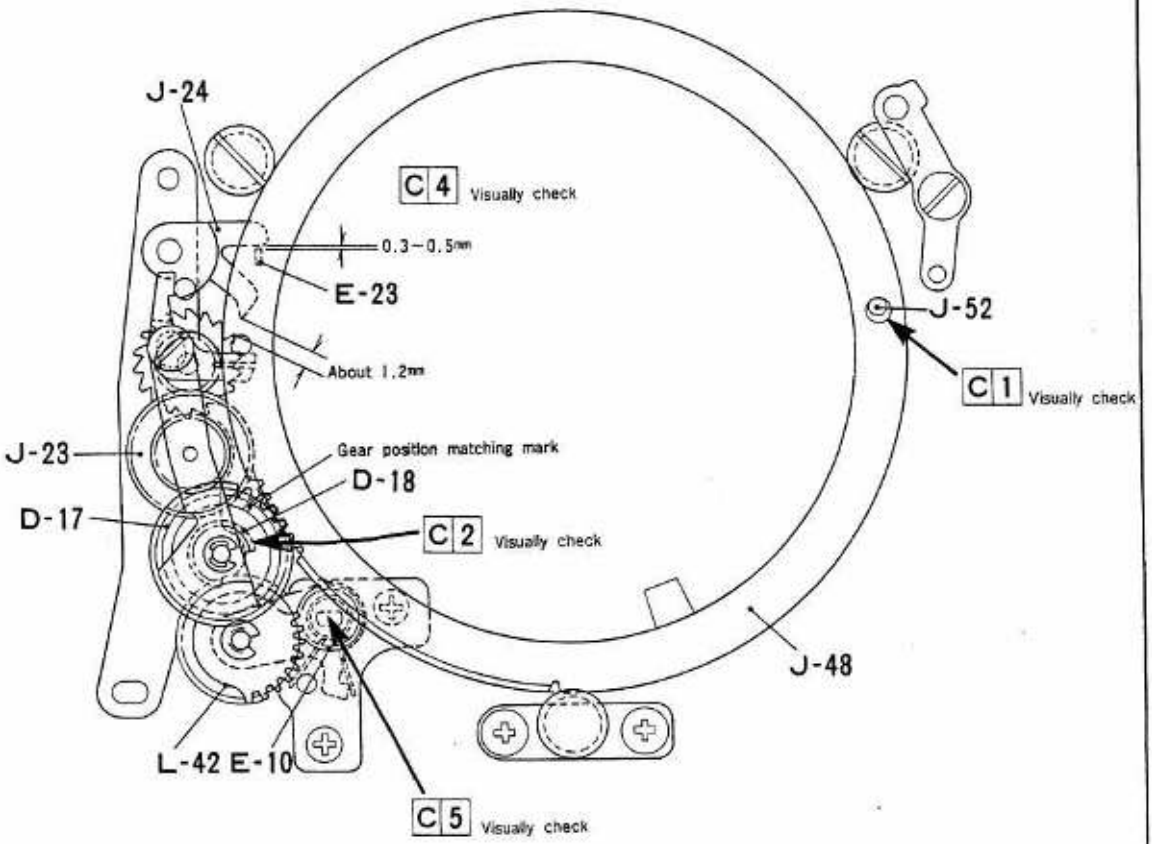

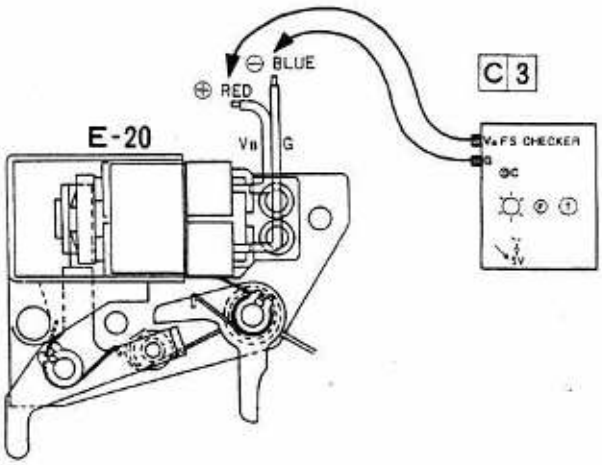

C	Power source	Lead wire	Measuring instrument	Range	Ascertainment
1	Not required				Visually check
2	Not required				Visually check
3	Not required	Detach	FS checker	5V	Operation
4	Not required				Visually check
5	Not required				Visually check

Is flexible printed circuit board conductive?

- NO → Check conduction between VB terminals, between α terminals and β terminals of flexible printed circuit board (H-45). ····· Replace flexible printed circuit board sub-assembly (404).

C 6

- YES ↓

Does diaphragm ring release pin amoothly operate?

- NO →
  - Check and see if diaphragm ring release pin (J-52) is deformed. ····· Adjust.
  - Check the way diaphragm ring release pin guide plate (J-53) is fitted. ····· Adjust.
  - Check and see if diaphragm ring release pin spring (J-51) is deformed. ····· Adjust.
- YES ↓

Does diaphragm detecting gear smoothly operate?

- NO →
  - With shutter put into running condition, check the way diaphragm detecting gear (D-17) is in gear with F-senser gear (J-23). ····· Adjust. Refer to "3-2-5-8 Key point for assembly adjustment."
  - Check the way diaphragm detecting gear is in gear with diaphragm ring (J-48). ····· Adjust. Refer to "3-2-5-6 Key points for assembly adjustment."
  - Check the way diaphragm detecting gear is in gear with diaphragm ring driving gear (L-52). ····· Adjust. Refer to "3-2-4 Key points for assembly adjustment."
- YES ↓

Is diaphragm magnet properly connected with flexible printed circuit board by lead wires?

- NO → Lead wire (red) of diaphragm magnet (E-23) is not connected with VB terminal of flexible printed circuit board (H-45), nor is lead wire (yellow green) connected with β terminal. ····· Resolder.

C 7

- YES ↓

Does diaphragm magnet properly operate?

- NO → Value of resistance between lead wires (red) and (yellow green) of diaphragm magnet (E-23) is abnormal. ····· Replace diaphragm magnet (05550).

  Specification: About 300Ω

C 8

- YES ↓

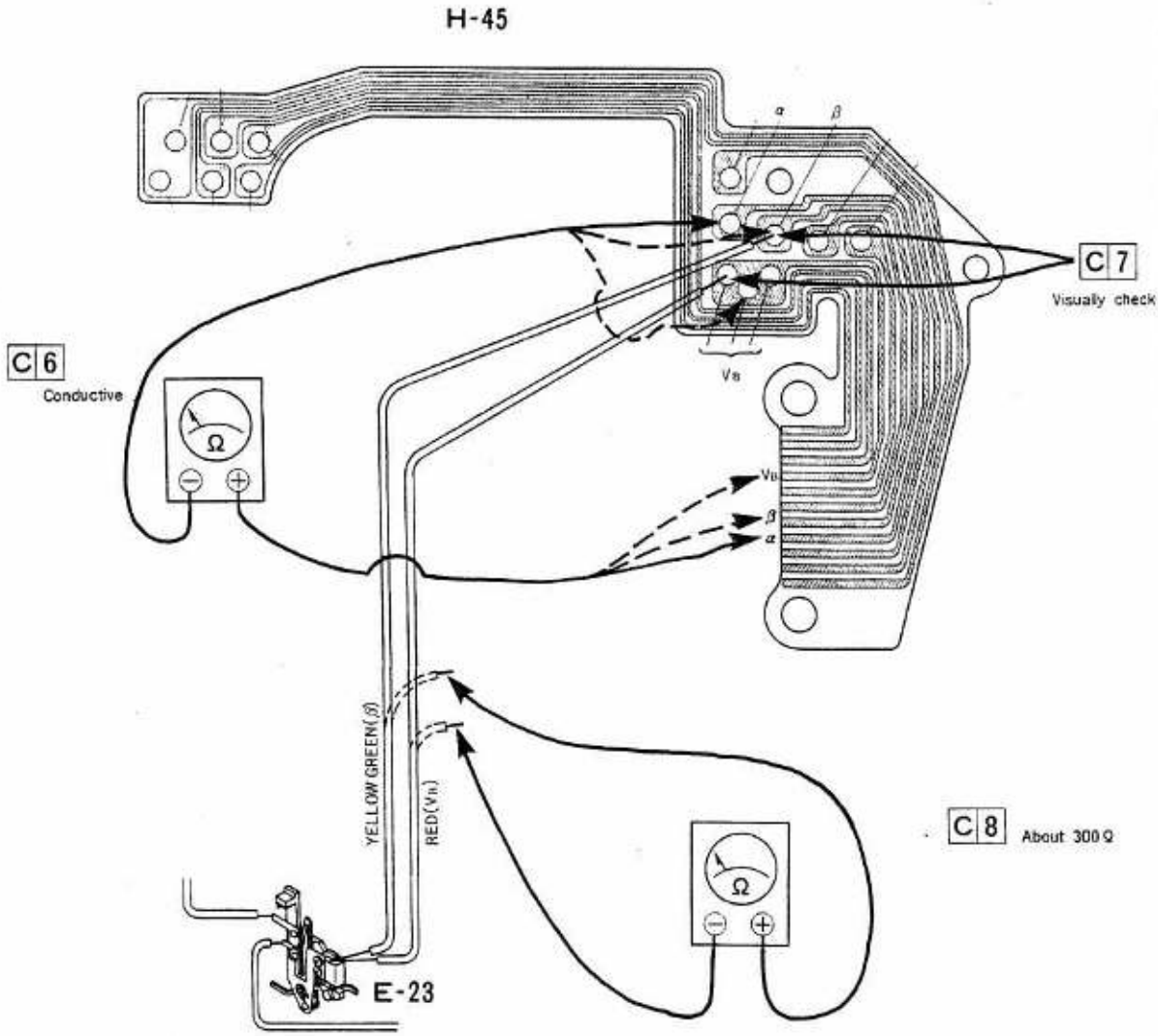

C	Power source	Lead wire	Measuring instrument	Range	Ascertainment
6	Not required	Detach	Tester	Ω	Conductive
7	Not required				Visually check
8	Not required	Detach	Tester	Ω	About 300 Ω

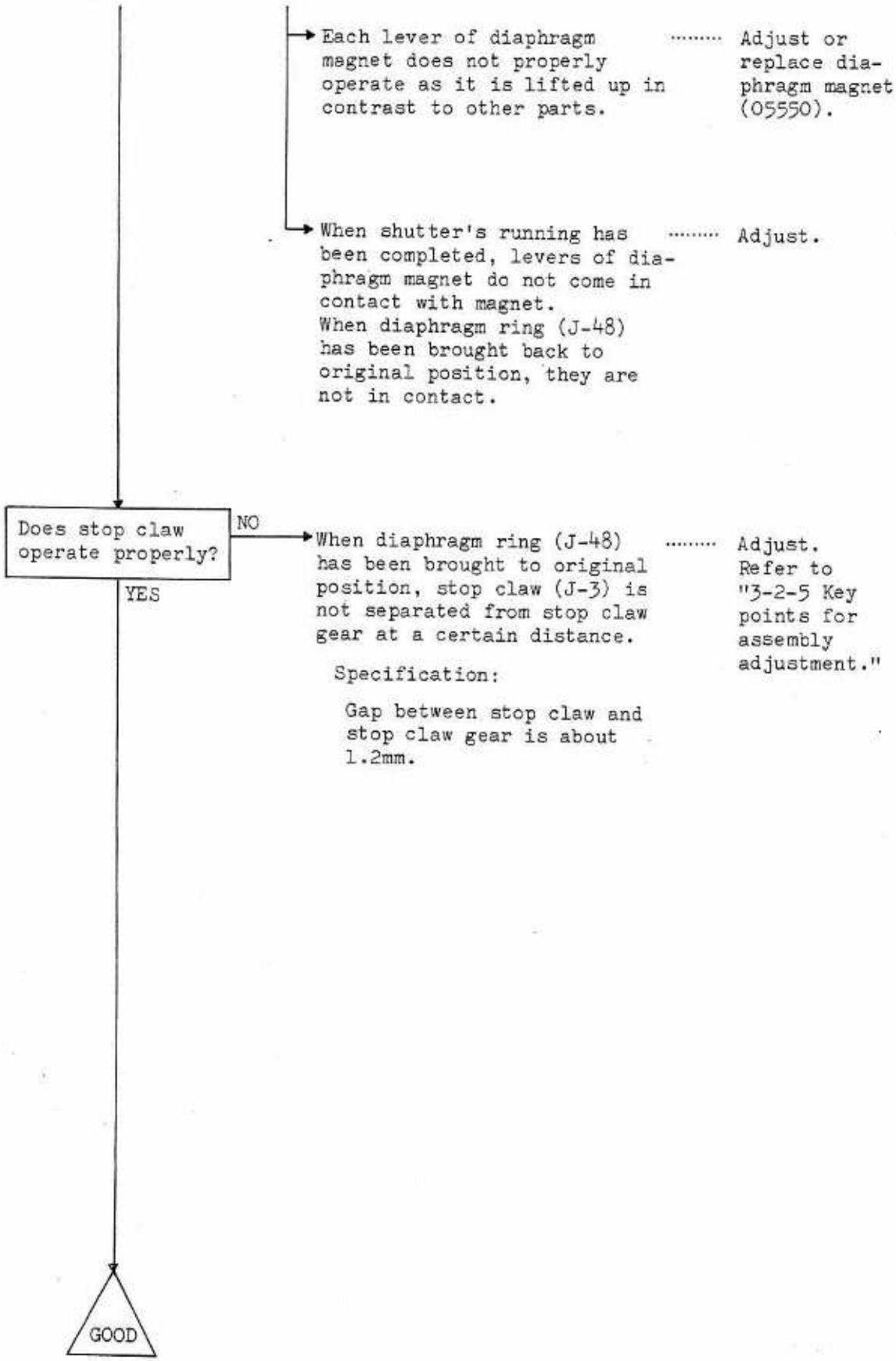
Each lever of diaphragm magnet does not properly operate as it is lifted up in contrast to other parts.
Adjust or replace diaphragm magnet (05550).
When shutter's running has been completed, levers of diaphragm magnet do not come in contact with magnet.
When diaphragm ring (J-48) has been brought back to original position, they are not in contact.
Adjust.
Does stop claw operate properly?
NO
YES
When diaphragm ring (J-48) has been brought to original position, stop claw (J-3) is not separated from stop claw gear at a certain distance.
Specification:
Gap between stop claw and stop claw gear is about 1.2mm.
Adjust. Refer to "3-2-5 Key points for assembly adjustment."
GOOD

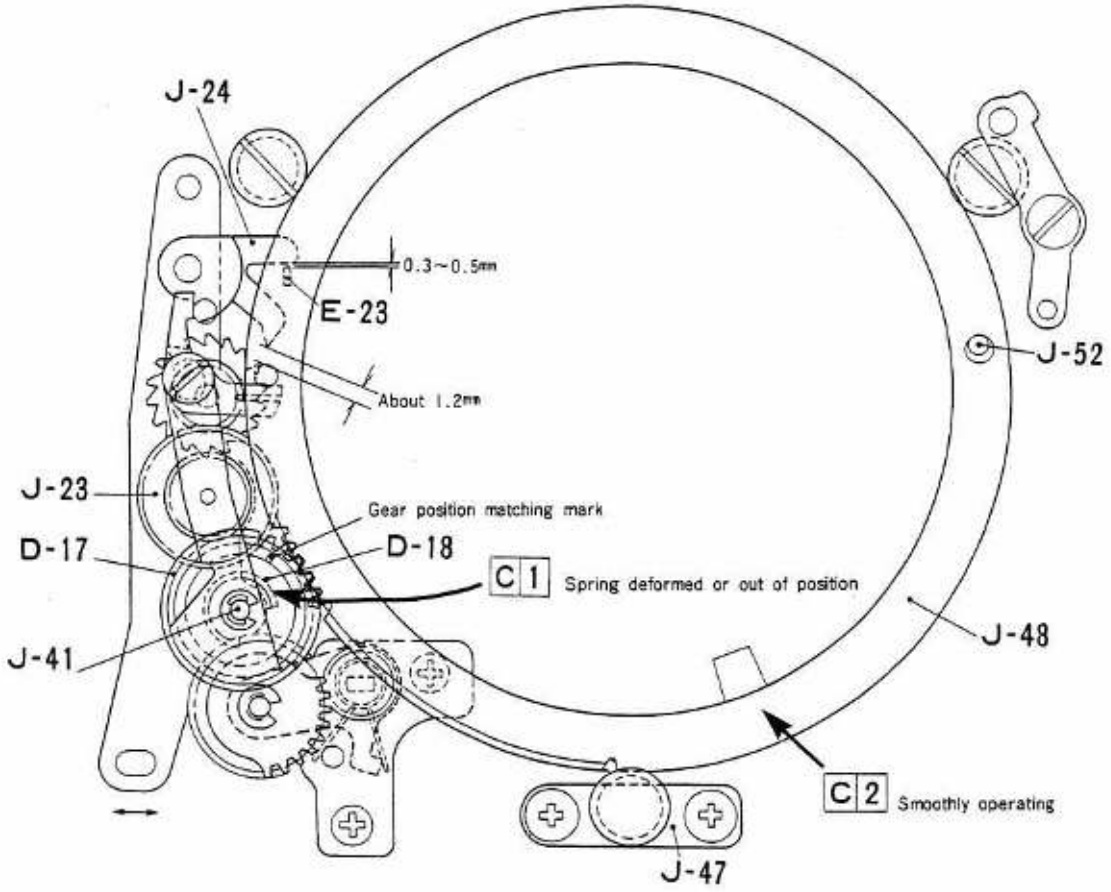

C 1 C 2 Key points of adjustment

Drop diaphragm detecting gear (D-17) to shaft (J-41) and put diaphragm ring driving spring into position.
Adjust the backlash of diaphragm ring to less than 0.1mm in the position whre roller adjustment plate subassembly (J-47) is fifted. fitted.

C	Power source	Lead wire	Measuring instrument	Range	Ascertainment
1	Not required				Visually check
2	Not required				Visually check

4-2-5 **DIAPHRAGM CONTROL OF DIAPHRAGM RING IS UNSTABLE**

Is diaphragm ring driving spring normal in operation?

NO → Check and see if diaphragm ring driving spring (D-18) deformed. ····· Adjust or replace diaphragm ring driving spring (05372).

C 1

→ Check and see if diaphragm ring driving spring is out of position. ····· Hook once again. Refer to "3-2-5-2 Key points for assembly adjustment."

C 1

YES ↓

Does diaphragm ring turn?

NO → When diaphragm detecting gear (D-17) is brought out of gear, diaphragm ring (J-48) does not smoothly turn. ····· Adjust. Refer to "3-2-5-5 Key points for assembly adjustment."

C 2

YES ↓

Is base plate terminal in normal condition?

NO → AE amplifier (B-25) is not properly connected with flexible printed circuite board (H-45), as base plate terminal is dirty or improper for some reason. ····· Clean.

YES ↓

Is flexible printed circuit board conductive?

NO → There is no coduction between VB terminals, between β terminals, G terminals, FS terminals and FLED terminals of flexible printed circuit board (H-45). ····· Replace flexible printed circuit board sub-assembly (404).

C 3

YES ↓

Is diaphragm magnet properly connected with flexible printed circuit board?

NO → Lead wire (red) of diaphragm magnet (E-23) is not connected with VB terminal of flexible printed circuit board (H-45), nor is lead wire (yellow green) connected with terminal. ····· Resolder.

C 4

YES ↓

Does diaphragm magnet properly operate?

NO →

- Value of resistance between lead wires (red) and (yellow green) of diaphragm magnet (E-23) is abnormal. ····· Replace diaphragm magnet (05550).

  Specification: About 300 Ω

  C 5

- Each lever of diaphragm magnet does not properly operate. ····· Replace diaphragm magnet (05550).

- When lever has been moved in the direction of the arrow, switch is not turned on. ····· Adjust switch.

  Specification:

  Contact resistance

  less than 0.1 Ω

  C 6

- Even when 6V has been added to diaphragm magnet, magnet lever is not fully sticked. ····· Replace diaphragm magnet (05550).

  Specification:

  Sticking power

  more than 70g

  C 7

YES ↓

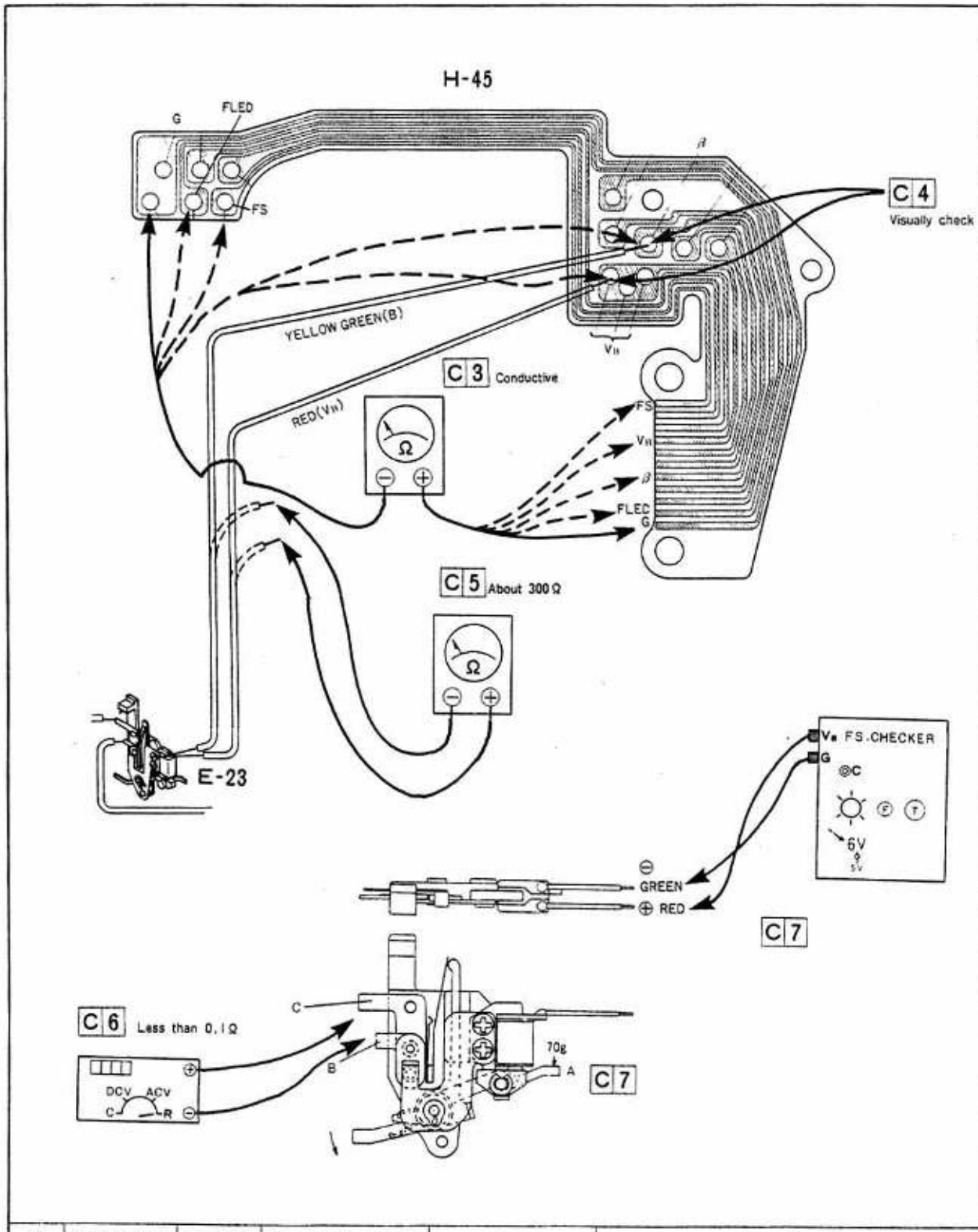

C	Power source	Lead wire	Measuring instrument	Range	Ascertainment
3	Not required	Detach	Tester	Ω	Conductive
4	Not required				Visually check
5	Not required	Detach	Tester	Ω	About 300 Ω
6	Not required	Detach	Digital voltmeter	Ω	Less than 0.1 Ω
7	Not required	Detach	FS checker Tension gauge	6V	70g

Magnet levers of diaphragm magnet do not come in contact with magnet when shutter's running has been completed, nor are they in contact when diaphragm ring (J-48) has been brought back to original position. ..... Adjust.

Does stop claw properly operate?

NO → In synchronization with diaphragm magnet (E-23), stop claw (J-24) does not come in and out of gear with stop claw gear (J-26), nor is it separated from stop claw gear, when diaphragm ring (J-48) has been brought back to original position. ..... Adjust. Refer to "3-2-5 Key points for assembly adjustment."

C 8

YES

Is the geared position of diaphragm ring driving gear proper?

NO → Diaphragm ring driving gear (L-42) is not in gear with diaphragm ring driving small gear (E-10). ..... Adjust. Refer to "3-2-2-1 Key points for assembly adjustment."

C 9

YES

Is soldering in AE amplifier proper?

NO → Hybrid IC and IC16523P in AE amplifier (B-25) are lifted up (G, FS, FLED and β). ..... Resolder.

C 10

YES

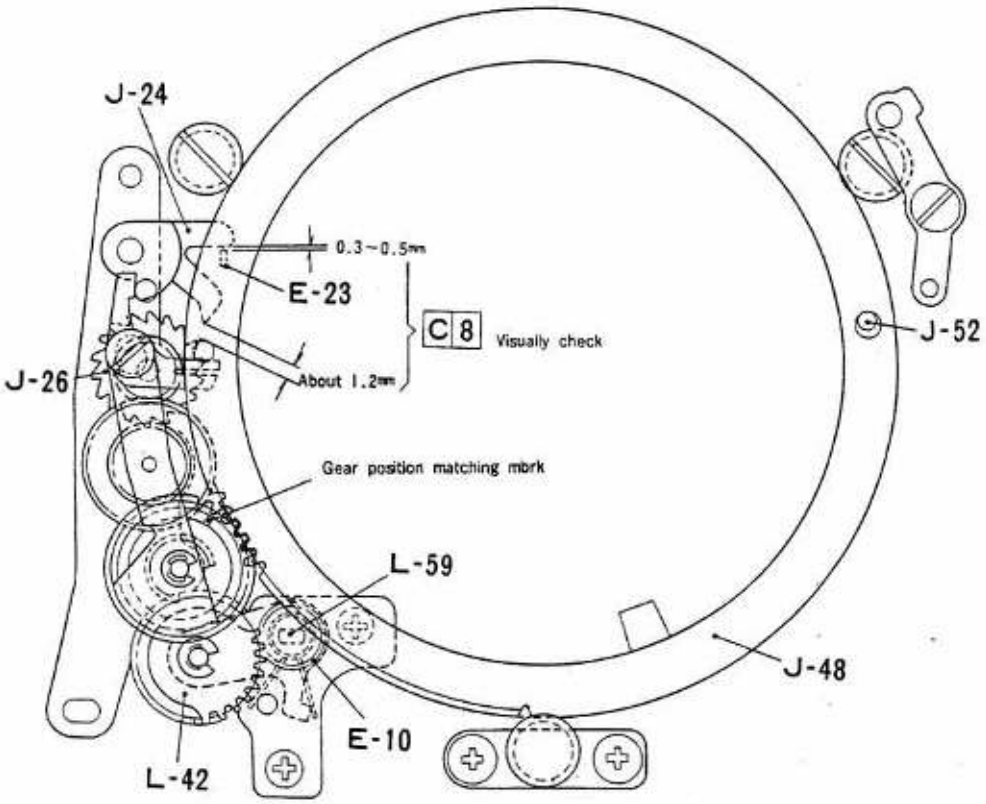

C 9

The positioning of the gear is done in the following sequence.
Hold the dual-sliding section of worm wheel shaft horizontal and fit diaphragm ring driving small gear in worm wheel shaft.
Here, fit diaphragm ring driving gear so that its 1st pitch comes in gear with diaphragm ring driving small gear.

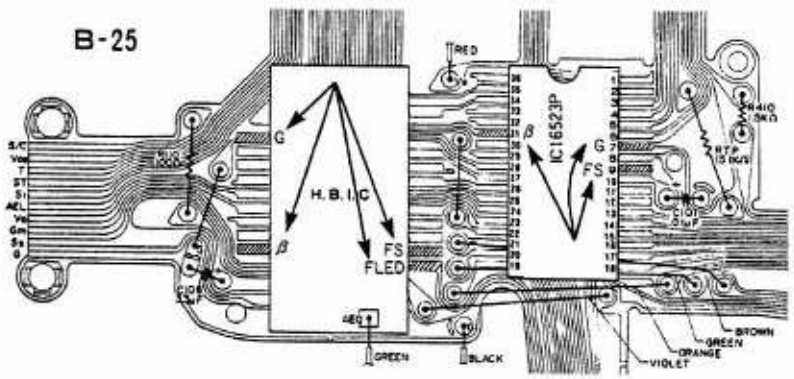

C 10 Visually check

C	Power source	Lead wire	Measuring instrument	Range	Ascertainment
8	Not required				Visually check
9	Not required				Visually check
10	Not required				Visually check

Is lead wire connected LED and photo-transistor proper?

NO → Check soldering and conduction of F-senser lead wire D (red, J-35) and F-senser lead wire (gray, J-34). ····· Resolder or replace lead wires (08111, 08113).

C 11

→ Check soldering and conduction of F-senser lead wire C (brown, J-38) and F-senser lead wire A (yellow J-37). ····· Resolder or replace lead wires (08110, 08112).

C 12

YES

Do F-senser siemenssters smoothly turn?

NO → Check and see if F-senser siemensster A (J-29) and F-senser siemensster B (J-30) are deformed. ····· Adjust or replace diaphragm detecting gear baseplate subassembly (533).

C 13

→ Check the way F-senser siemensster A and F-senser siemensster B are fitted. ····· Adjust. Refer to "3-2-3 Key points for assembly adjustment."

C 14

→ Check and see if F-senser gear (J-23) and stop claw gear (J-26) are worn out in condition where shutter's running has been completed. ····· Adjust or replace diaphragm detecting gear baseplate subassembly (533).

YES

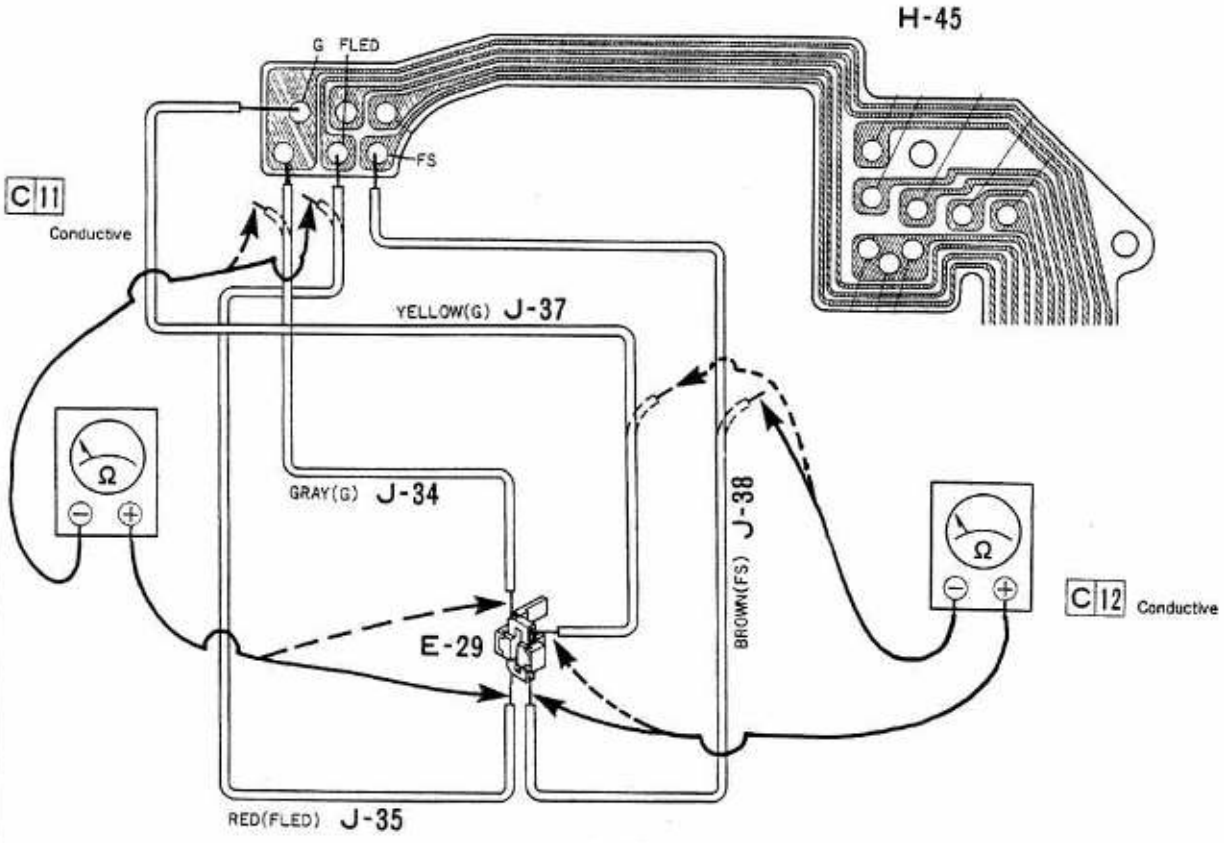

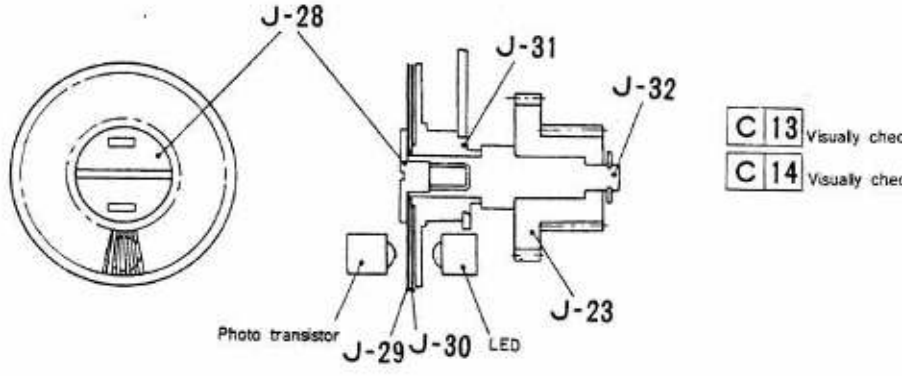

C 13 C 14 Key points of adjustment

(1) F-senser Siemenster A (J-29) must be securely fixed by Siemenssster set screw (J-28) and F-senser Siemenssster B (J-30) by F-senser gear shaft bearing metal (J-31).

(2) Siemenssster set screw (J-28) must be securely fixed to F-senser gear shaft (J-32) to transmit the rotation of F-senser gear (J-23).

(3) F-senser Siemenssster A and B must be placed in paralle to each other and there must be a gap of about 0.2±0.1mm.

(4) Note that the F-senser Siemenssters are easy to deform.

C	Power source	Lead wire	Measuring instrument	Range	Ascertainment
11	Not required	Detach	Tester	Ω	Conductive
12	Not required	Detach	Tester	Ω	Conductive
13	Not required				Visually check
14	Not required				Visually check

Does diaphragm detecting gear smoothly turn?

NO → Check the way diaphragm detecting gear (D-17) is in gear with F-senser gear (J-23) in condition where shutter's running been completed. ..... Adjust. Refer to "3-2-5-8 Key points for assembly adjustment."

C 15

→ Check the way diaphragm detecting gear is in gear with diaphragm ring (J-48). About 0.2mm from top to bottom. ..... Adjust. Refer to "3-2-5-6 Key points for assembly adjustment."

C 15

→ Check the way diaphragm detecting gear is in gear with diaphragm ring driving gear (L-42). ..... Adjust. Refer to "3-2-5 Key points for assembly adjustment."

C 15

YES ↓

Is shutter resistor normal condition?

NO → The T voltage from the shutter resistor (B-7) is not stable. ..... Clean or replace the shutter resistor (08002).

Specification:

T = 1.4V ±10mV (1/60 sec)

C 16

YES ↓

Is ASA resistor normal condition?

NO → The S voltage from the ASA resistor (B-30) is not stable. ..... Clean or replace the ASA resistor (08013).

Specification:

S = 1.2V ±10mV (ASA100)

C 17

YES ↓

GOOD

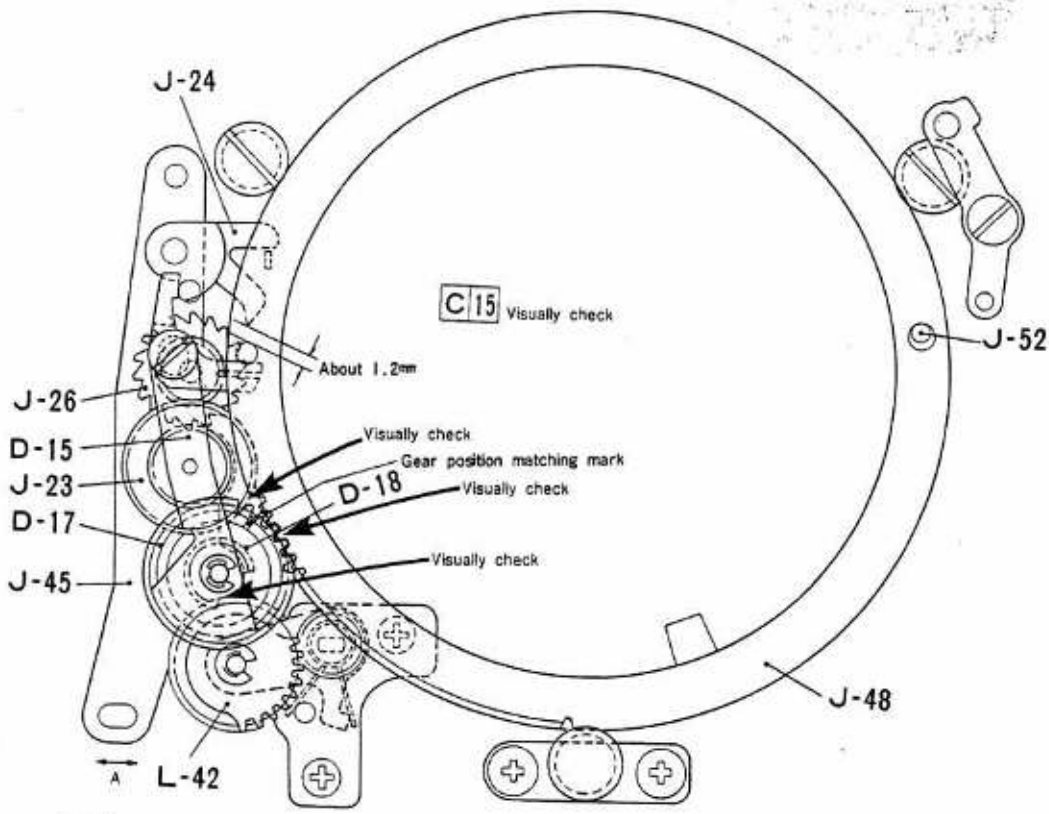

C 15 Key point of adjustment

1. Swing diaphragm detecting gear base plate (J-45) in the direction of the arrow A and adjust the engagement so that diaphragm ring (J-48) and diaphragm detecting gear (D-17) may turn in a smooth manner. Adjust the gap between the tooth crests and bottom lands of the gears to set it at about 0.2mm. After this adjustment, tighten the screw.
2. In a situation where diaphragm ri ng release pin (J-52) falls in diaphragm ring (J-48), detach stop claw (J-24) from stop claw gear (J-26) . Here, when the engagement of diaphragm ring release pin (J-24) is released, diaphragm ring must smoothly turn to the position of F22.
   When this movement is not smooth, adjust it by moving the elongated hole of diaphragm detecting gear adjusting plate (D-15). After the adjust, make sure that the set screw has been fully tightened.

B-7

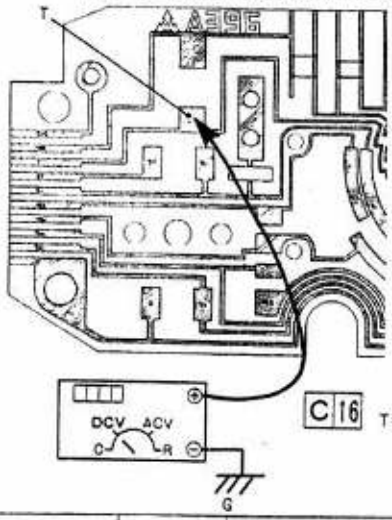

C 16 T=1.4V±10mV(1/60)

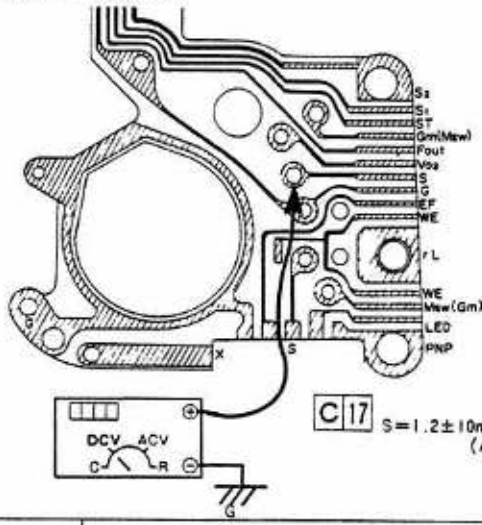

C 17 S=1.2±10mV (ASA100)

C	Power source	Lead wire	Measuring instrument	Range	Ascertainment
15	Not required				Visually check
16	Required (6V)		Digital voltmeter	V	T=1.4V±10mV(1/60)
17	Required (6V)		Digital voltmeter	V	S=1.2V±10mV(ASA100)

4-2-6 DIAPHRAGM RING UNRETURNABLE TO ORIGINAL POSITION

Does diaphragm ring driving gear lever smoothly operate?

- NO → Driving gear lever (L-45) is not smoothly operated by driving gear lever spring (L-43). ····· Adjust. **C1**
- NO → Check and see if driving gear lever spring is deformed. ····· Replace diaphragm ring driving gear baseplate subassembly (548). **C1**
- YES ↓

Is diaphragm ring driving small gear in normal condition?

- NO → Small hole of diaphragm ring driving small gear (E-10) is deformed. ····· Replace diaphragm ring driving small gear (05488). **C2**
- YES ↓

Does diaphragm ring smoothly operate?

- NO → Diaphragm ring (J-48) does not smoothly operate in condition where diaphragm detecting gear (D-17) has been detached. ····· Adjust. Refer to "3-2-5-5 Key points for assembly adjustment." **C3**
- YES ↓

Does mirror box motor rotate?

- NO → Rotating power of mirror box motor (E-16) is not big enough to restore diaphragm ring (J-48). ····· Refer to "Mirror remains flipped up (4-2-2-3)."
- YES ↓

Does diaphragm detecting gear smoothly rotate?

- NO → Check the way diaphragm detecting gear (D-17) is in gear with diaphragm ring (J-48) in condition where shutter's running has been completed. ····· Adjust. Refer to "3-2-5-6 Key points for assembly adjustment."

  Specification:

  About 0.2mm from top to bottom.

  C4

- NO → Check the way diaphragm detecting gear is in gear with diaphragm ring driving gear (L-42). ····· Adjust or replace diaphragm detecting gear (05307). **C5**
- YES ↓

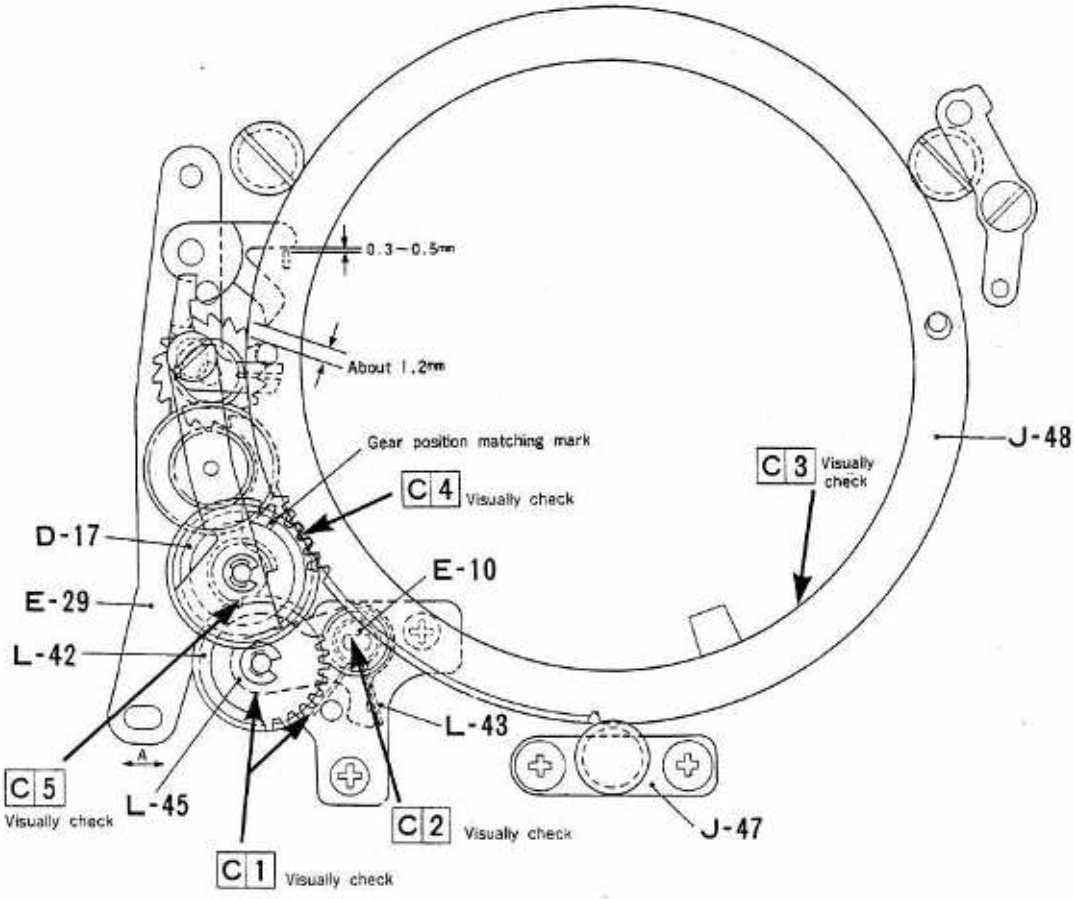

C 3 C 4 Key point of adjustment

1. Adjust the backlash of diaphragm ring (J-48) to less than 0.1mm in the position where roller adjustment plate subassembly (J-47) is fitted.
2. Swing diaphragm detecting gear base plate (E-29) in the direction of the arrow A and adjust the engagement so that diaphragm ring (J-48) and diaphragm detecting gear (D-17) may turn in a smooth manner. Adjust the gap between the tooth crests and bottom lands of the gears to set it at about 0.2mm. After this adjustment, tighten the screw.

C	Power source	Lead wire	Measuring instrument	Range	Ascertainment
1	Not required				Visually check
2	Not required				Check the deform of small hole
3	Not required				Smoothly operate
4	Not required				Visually check (clearance between the tooth crests and bottom lands)
5	Not required				Visually check

Does the series of diaphragm ring driving small gears smoothly rotate?

NO → Diaphragm ring driving small gear (E-10), fitted properly to worm wheel shaft (L-59), do not turn in synchronization with shaft. ····· Adjust or replace diaphragm ring driving small gear (05488).

NO → Check the way diaphragm ring driving small gear is in gear with diaphragm ring driving gear (L-42). ····· Adjust. Refer to "3-2-2-1 Key points for assembly adjustment."

C 6

YES

Does diaphragm ring release pin smoothly operate?

NO → Diaphragm ring release pin (J-52) is deformed or lifted up in contrast to other parts. ····· Adjust.

C 7

NO → Check the way diaphragm ring release pin guide plate (J-53) is fitted. ····· Adjust.

C 7

NO → Check and see if diaphragm ring release pin spring (J-51) is deformed. ····· Adjust.

C 7

YES

Is mirror box motor stops in the correct position?

NO → The mirror driving 5th gear (J-10) does not stop almost directly under its alignment mark. ····· Refer to "Mirror box motor does not stop." (4-2-7)

YES

GOOD

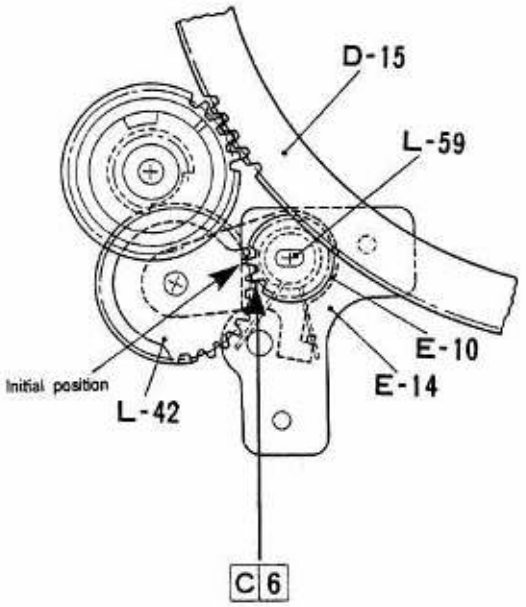

C 6 Key point of adjustment

The positioning of the gear is done in the following sequence.

Hold the dual-siding section of wormwheel shaft (L-59) horizontal and fit diaphragm ring driving small gear (E-10) in worm wheel shaft. Here, fit diaphragm ri ng driving gear (L-42) so that its fifth tooth comes in gear with diaphragm ring driving small gear (E-10).

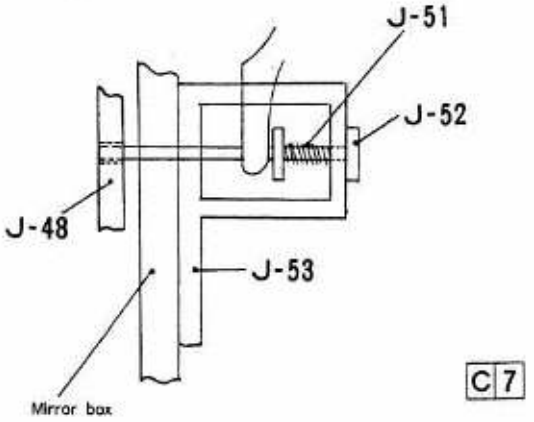

C	Power source	Lead wire	Measuring instrument	Range	Ascertainment
6	Not required				Visually check
7	Not required				Visually check

4-2-7 MIRROR BOX MOTOR DOES NOT STOP

Does rear blade information lever normally operate?

- NO → Diaphragm magnet's (E-23) rear blade information lever is lifted up in contrast to other parts and is not coupled to shutter's rear blade, making it impossible for rear blade information lever to operate in a smoothly. ····· Replace diaphragm magnet (05550).
- YES ↓

Can rear blade information switch (SMM1) be turned ON and OFF?

- NO → Rear blade information switch (SMM1) of diaphragm magnet (E-23) can not be turned OFF when shutter has been set. ····· Adjust rear blade information switch or replace diaphragm magnet (05550).

C 1

- YES ↓

Can mirror box motor switch (SMM2) be turned ON and OFF?

- NO → Mirror box switch contact plate A (L-36) cannot be turned OFF with mirror box contact plate B (L-39) in synchronization with switch cam (L-21). ····· Adjust switch.

C 2

- YES ↓

Is shutter's rear blade fully set?

- NO → Mirror box motor (E-16) start tuning in response to rear blade information of shutter (H-41) nor shutter has been fully set. ····· Refer to "Shutter cannot be set." (4-3-4).
- YES ↓

C 1 OFF→∞

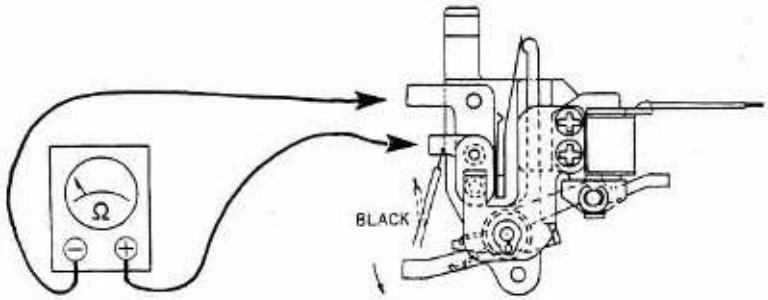

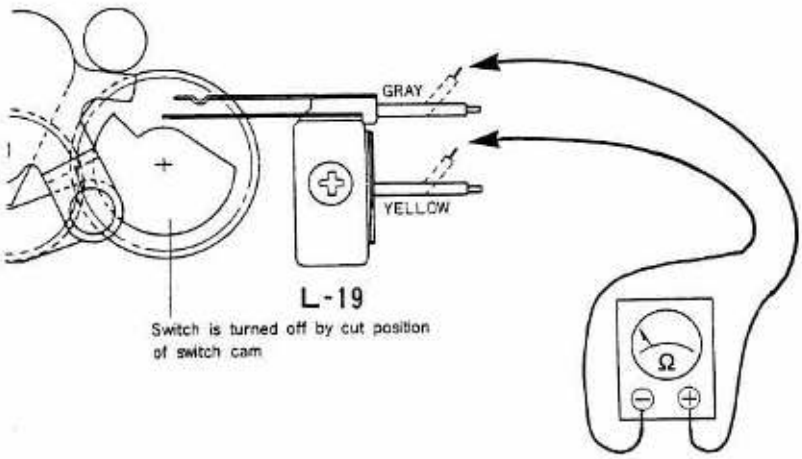

C 2 OFF→∞

C	Power source	Lead wire	Measuring instrument	Range	Ascertainment
1	Not required	Detach	Tester	Ω	OFF→∞
2	Not required	Detach	Tester	Ω	OFF→∞

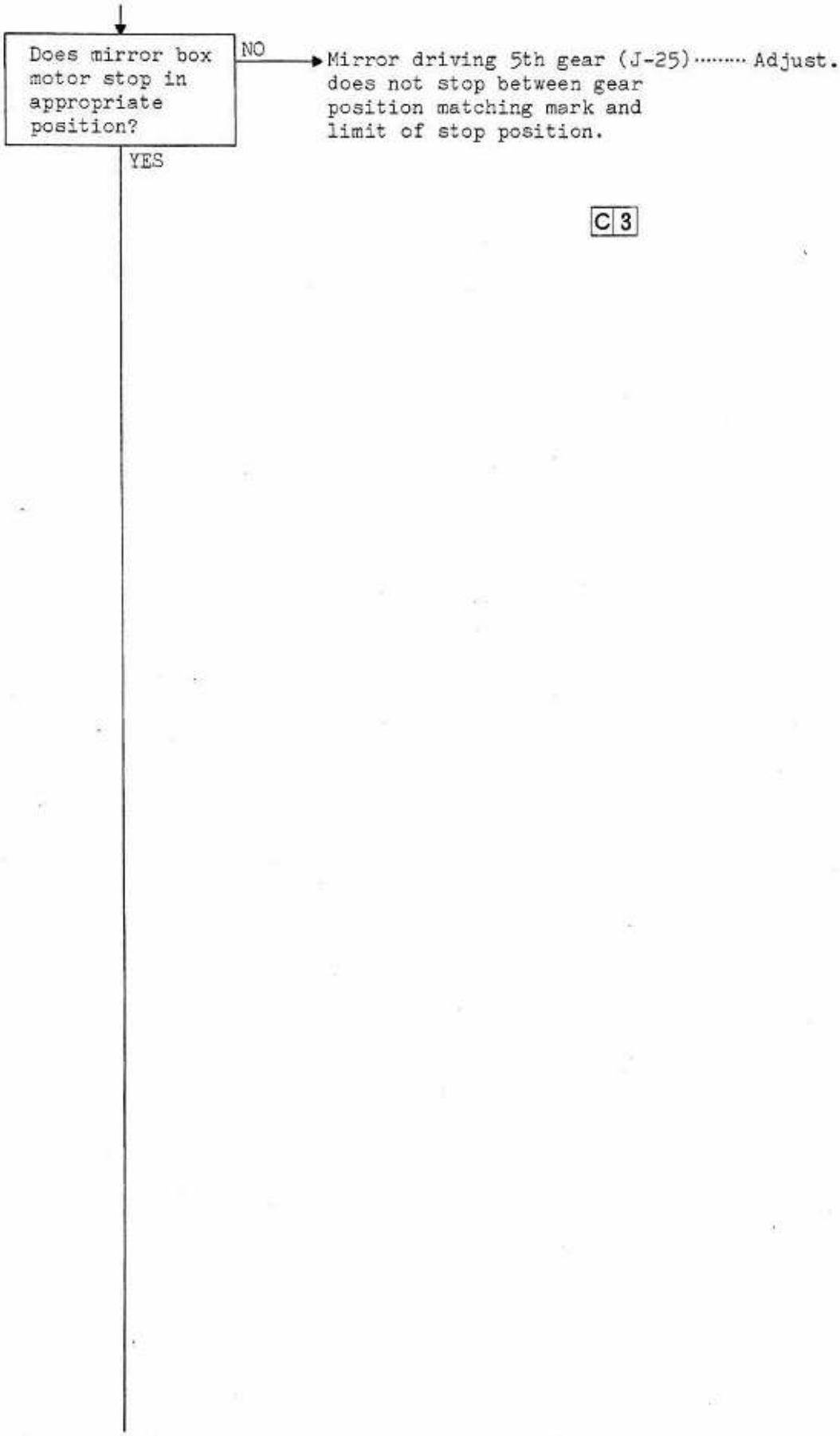
Does mirror box motor stop in appropriate position?
NO
Mirror driving 5th gear (J-25)..... Adjust.
does not stop between gear position matching mark and limit of stop position.
YES
C 3

C 3 Key point of adjustment

1) Turn the motor clockwise with dedicated tool put into the mirror box shaft (on the side of the lead wires). The moment the mirror box switch has been turned off, (initial position of the shutter charge plate subassembly).
2) Set mirror driving gear plate subassembly to the mirror box frame so that it comes right under the positioning mark of mirror driving 5th gear (J-10)
3) Fit mirror driving 1st gear (E-3) in the states of 1) and 2), above.
4) After the motor shaft has been turned clockwise seven times, make sure that the gear position alignment mark of the mirror driving 5th gear (J-10) does not come above the vertical line.
5) The gap between the mirror driving 1st gear (E-3) and the tip of the motor shaft must be more than 0.1~0.2mm.
6) Turning-on of Release Magnet (red…⊕, light blue…⊖, at DC5.0V) As hook lever is detached from mirror driving gear (K-76), mirror (E-39) is flipped up.
7) When mirror driving 1st gear (E-3) has been turned clock-wise 36 times, hook lever engages with mirror driving gear (K-41), returning the mirror (E-39) to the original position without fail.

C 3 Visually check

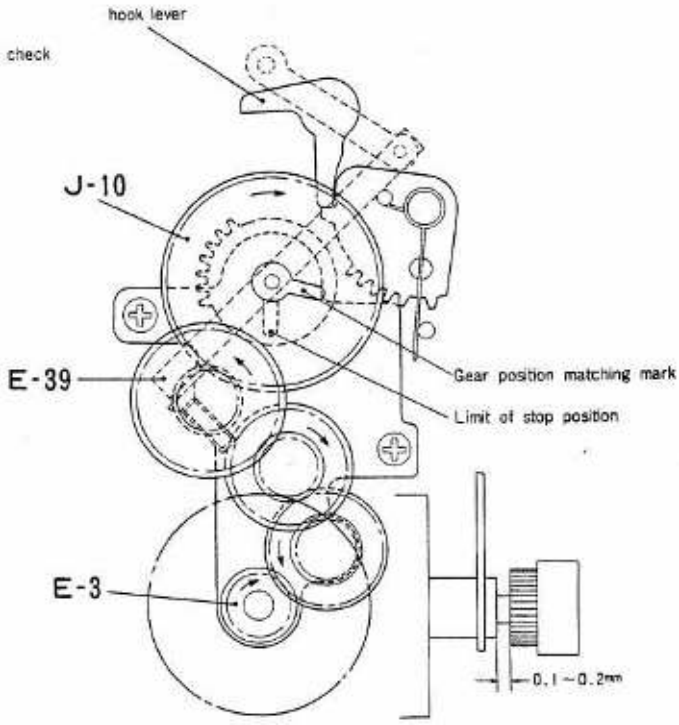

C	Power source	Lead wire	Measuring instrument	Range	Ascertainment
3	Not required				Visually check

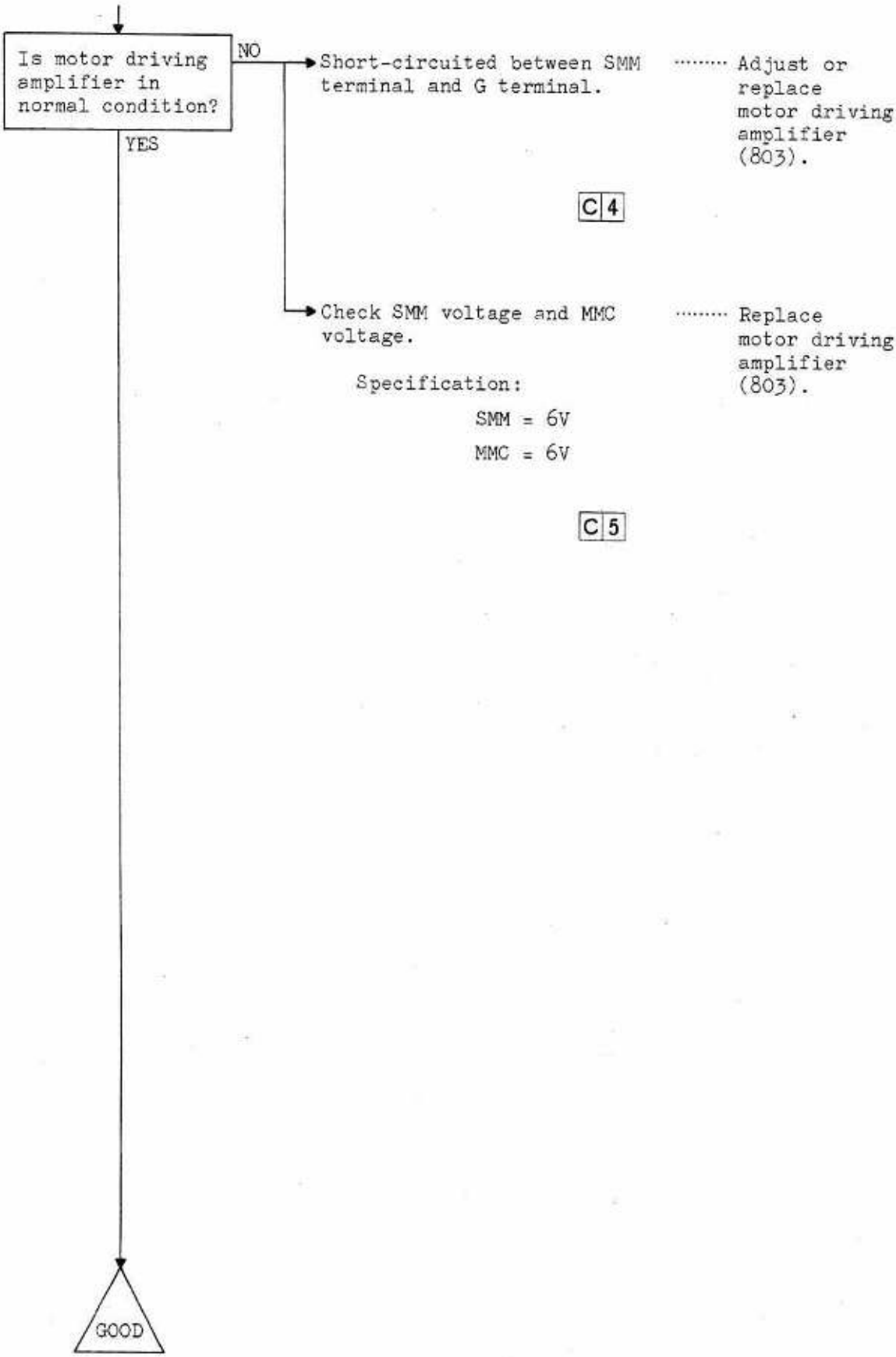
Is motor driving amplifier in normal condition?
NO
YES
Short-circuited between SMM terminal and G terminal.
Adjust or replace motor driving amplifier (803).
C 4
Check SMM voltage and MMC voltage.
Specification:
SMM = 6V
MMC = 6V
Replace motor driving amplifier (803).
C 5
GOOD

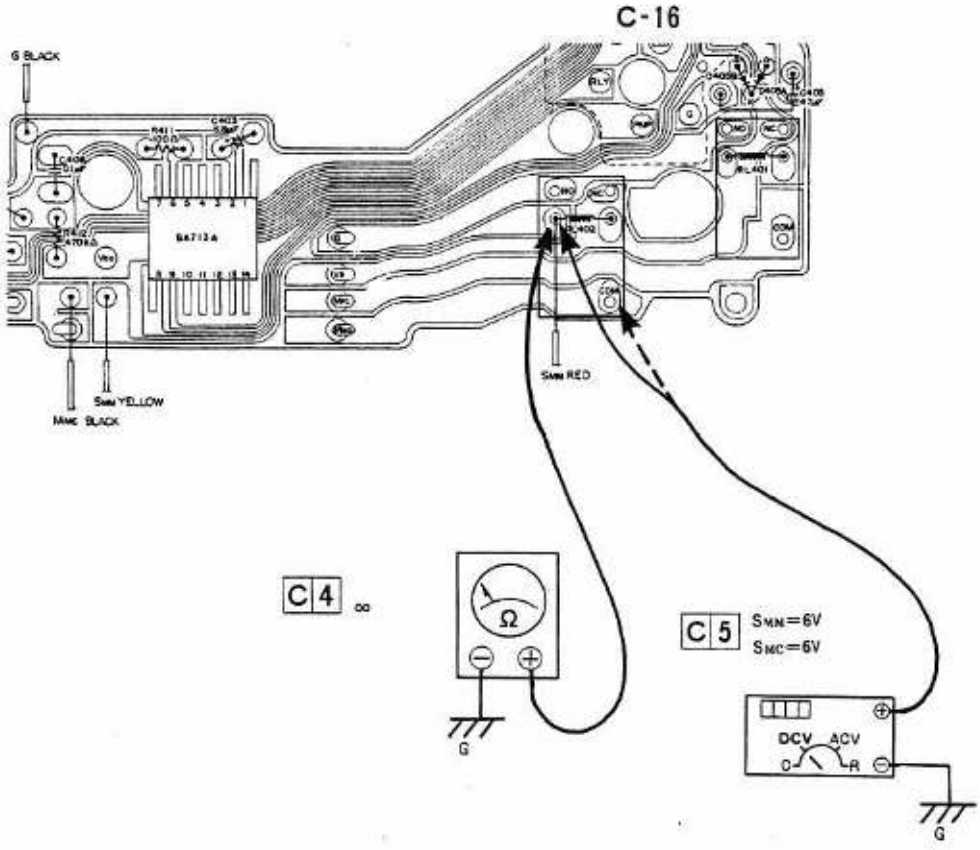

C	Power source	Lead wire	Measuring instrument	Range	Ascertainment
4	Not required		Tester	Ω	∞
5	Required (6V)		Digital voltmeter	V	SMN=6V SMC=6V

4-2-8 DIAPHRAGM RING DOES NOT SMOOTHLY OPERATE

Is diaphragm ring is properly in gear with diaphragm detecting gear?

- NO → Diaphragm ring (J-48) is not properly in gear with diaphragm detecting gear (D-17). ..... Adjust by diaphragm defecting gear adjusting plate.

  Specification:
  The gap between the teeth and the depressions is about 0.2mm.

  C1

- YES ↓

Is the operation of diaphragm ring normal?

- NO → When diaphragm detecting gear (D-17) is detached and diaphragm ring release pin (J-52) is depressed, diaphragm ring (J-48) does not smoothly operate. ..... Adjust.
- → Diaphragm ring's backlash is more than 0.1mm. ..... Adjust.

  C2

- → Diaphragm ring's sliding plane is dirty or flow. ..... Clean or replace diaphragm ring subassembly (545).

  C2

- → The sliding planes of diaphragm ring roller (L-2), diaphragm ring roller (K-57) and diaphragm ring collar (J-58) are dirty or flow. ..... Clean or replace front baseplate subassembly or roller adjusting plate subassembly (534,544).

  C3

- YES ↓

Is the operation of diaphragm detecting gear normal?

- NO → Check the way the F-senser gear (J-23) and stop claw gear (J-26) on diaphragm detecting gear baseplate subassembly operate and down out. ..... Adjust or replace diaphragm detecting gear baseplate subassembly or stop claw gear (533, 05319).

  C4

- → F-senser does not smoothly operate. ..... Adjust or replace diaphragm detecting gear baseplate subassembly (533).

  C5

- YES ↓

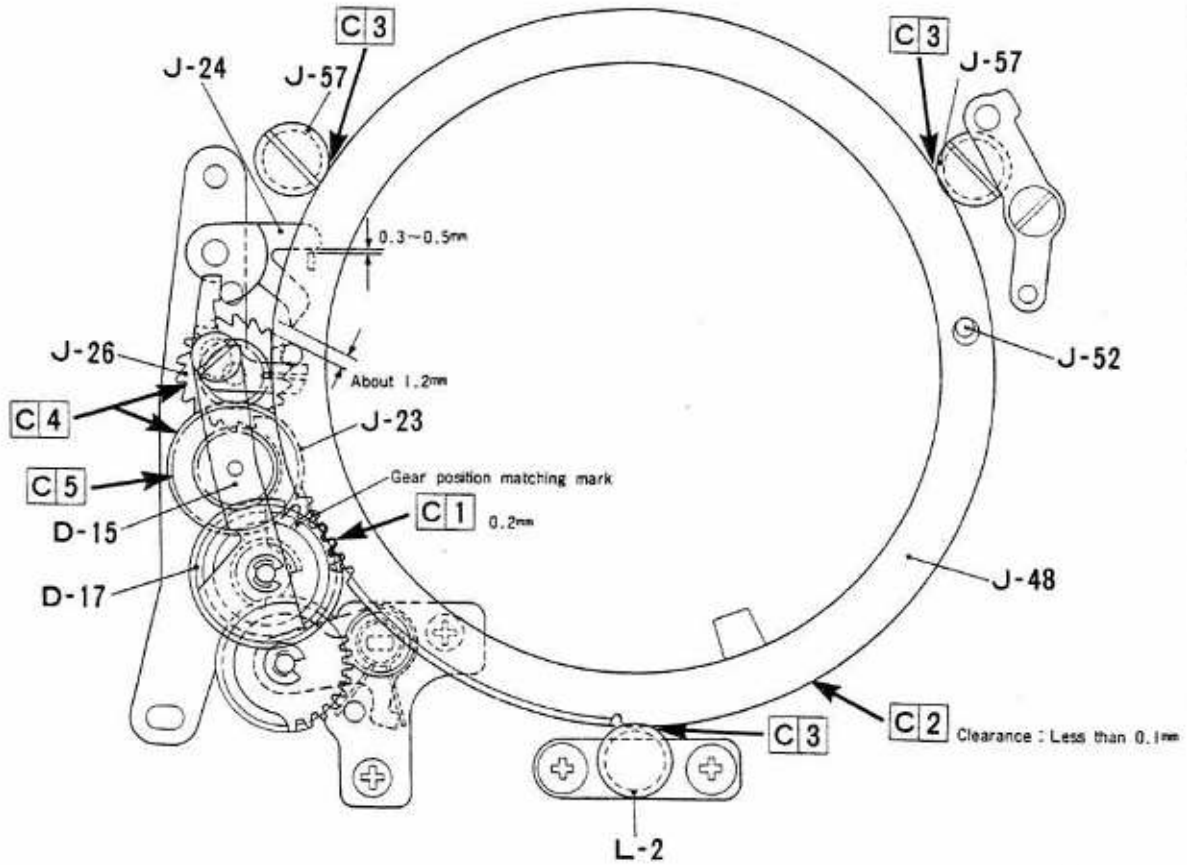

C	Power source	Lead wire	Measuring instrument	Range	Ascertainment
1	Not required				About 0.2mm
2	Not required				Clearance : Less than 0.1mm, Visually check
3	Not required				Visually check
4	Not required				Visually check
5	Not required				Check the operation

Is the operation of stop claw normal?

NO → Stop claw (J-24) does not smoothly operate by dint of the restoration of stop claw spring (J-25). ····· Adjust or replace stop claw gear and stop claw spring (05319, 05323).

C 6

→ Check the gap between stop claw and stop claw gear (J-26) and between stop claw and magnet lever. ····· Adjust.

Specification:

Stop claw ↔ Stop claw gear about 1.2mm

Stop claw ↔ Magnet lever 0.3 ~ 0.5mm

C 7

YES ↓

Are the teeth of diaphragm ring driving gear correct in position?

NO → Diaphragm ring driving gear (L-42) is not properly in gear position with diaphragm ring driving small gear (E-10). ····· Adjust.

C 8

YES ↓

GOOD

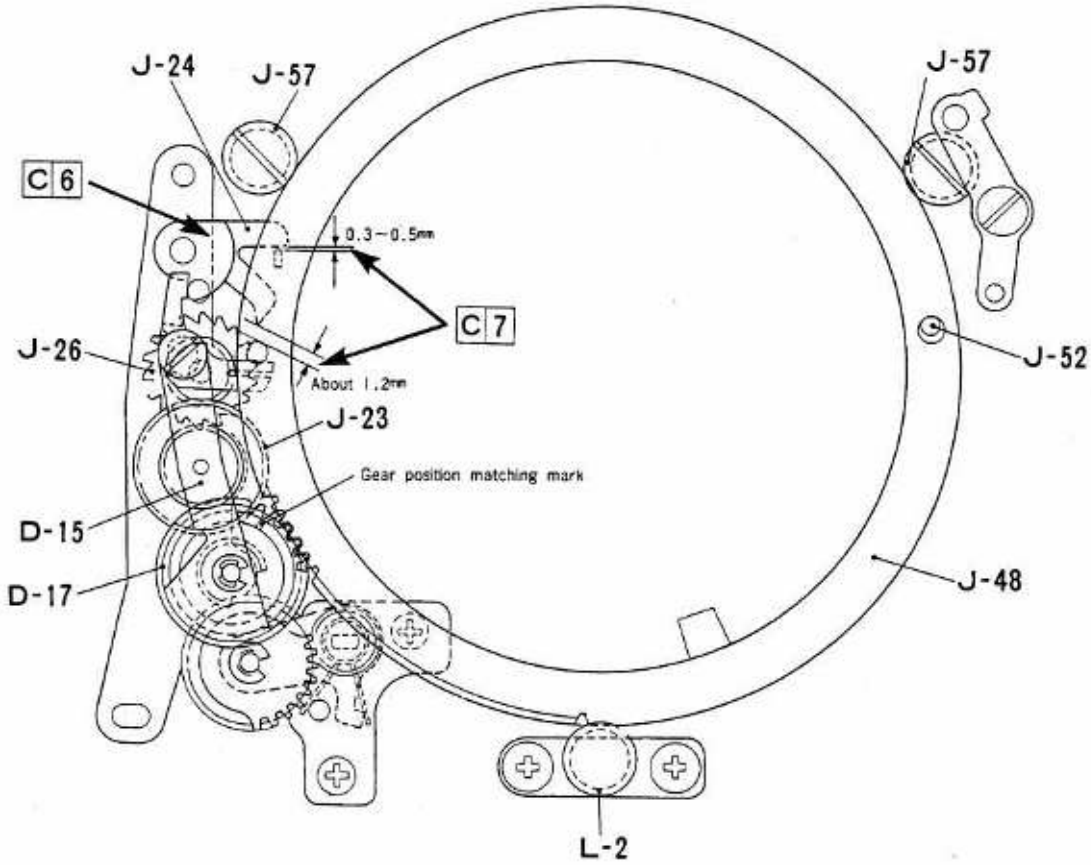

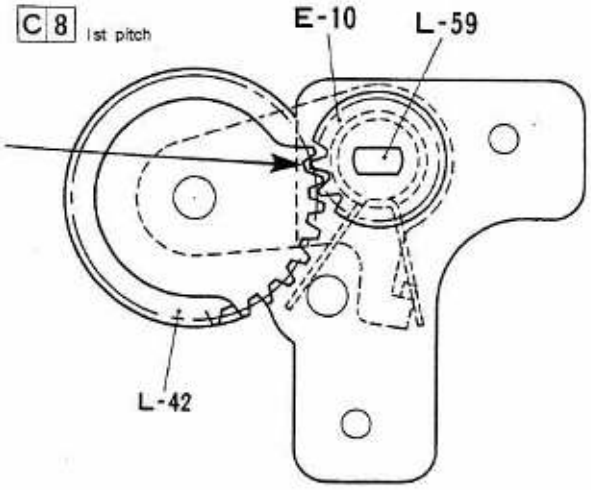

C	Power source	Lead wire	Measuring instrument	Range	Ascertainment
6	Not required				Check the operation
7	Not required				Stop claw←→Stop claw gear about 1.2mm Stop claw←→Magnet lever 0.3−0.5mm
8	Not required				Visually check

4-3 SHUTTER

4-3-1 SHUTTER STOPS HALFWAY

Is mirror box motor switch (SMM2) properly turned ON?

- NO → As mirror box motor (E-16) turns, mirror box motor switch (L-30) is not turned ON by switch cam (L-21). ····· Adjust and clean or replace mirror box motor switch subassembly (547).

  C 1

- NO → SMM2 earth lead wire (Gray L-34) is not conductive between mirror box switch contact plate B (L-39) and A.M minus contact plate (L-61). ····· Resolder or replace lead wire (08130).

  C 2

- NO → SMM2 lead wire (Yellow L-33) is not conductive between mirror box switch contact plate A and SMM terminal of motor driving amplifier. ····· Resolder or replace lead wire (08115).

  C 3

- YES ↓

Does shutter charge plate sub-assembly properly operate?

- NO → As mirror box motor (E-16) is turned, shutter is not charged by shutter charge arm's action. ····· Replace shutter charge plate sub-assembly (546).
- YES ↓

Does shutter properly operate by itself?

- NO → Shutter (H-41) cannot be set with set lever (R-24). ····· Replace shutter sub-assembly (402).
- NO → Shutter's set load is abnormally heavy. ····· Adjust or replace shutter sub-assembly (402).
- YES ↓

Is mirror box motor in normal condition?

- NO → Mirror box motor's torque is lacking. ····· Replace mirror box motor sub-assembly (551).
- YES ↓

GOOD

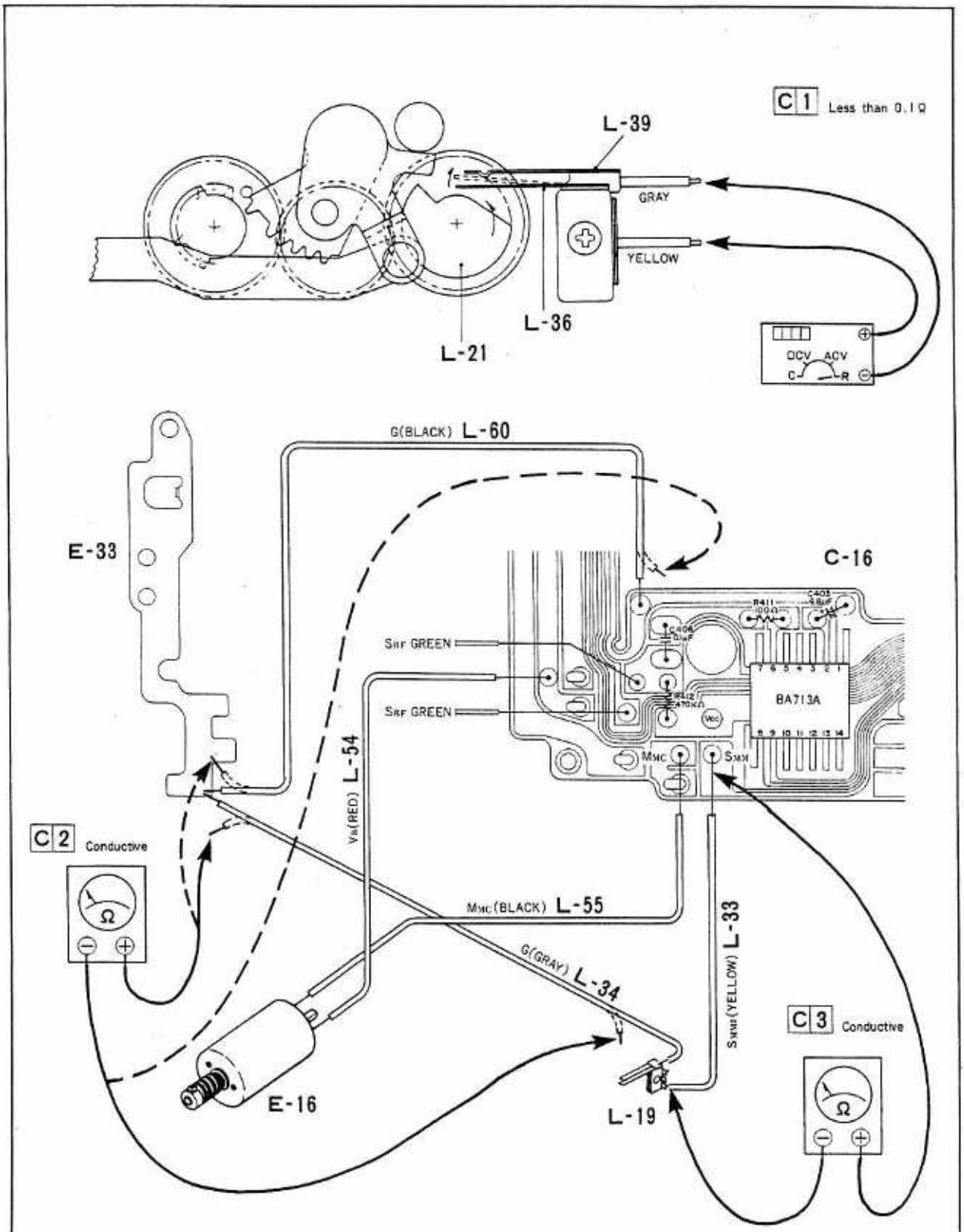

C	Power source	Lead wire	Measuring instrument	Range	Ascertainment
1	Not required	Detach	Digital voltmeter	Ω	Less than 0.1Ω
2	Not required	Detach	Tester	Ω	Conductive
3	Not required		Tester	Ω	Conductive

4-3-2 SHUTTER DOSE NOT OPEN OR REMAINS OPENE

Can shutter be set?

- NO →
  - The 1st lever subassembly (R-8) is not properly stick as lead blade magnet is dirty or dusty. ····· Clean or replace shutter sub-assembly (402).
  - The 2nd lever subassembly (R-9) is not properly stick as rear blade magnet is dirty or dusty. ····· Clean or replace shutter sub-assembly (402).
  - Action of lead and rear blade armatures is so poor that they do not stick to magnet. ····· Adjust or replace shutter sub-assembly (402).
- YES ↓

Is base plate terminal properly fitted?

- NO → AE amplifier (B-25) is not properly connected with flexible printed circuit board (H-45), as base plate terminal is dirty or improper for some reason. ····· Clean.
- YES ↓

Is flexible printed circuit board properly conductive?

- NO →
  - Check and see if there is conduction between VB terminals, between γ terminals and between δ terminals of flexible printed circuit board (H-45). ····· Resolder or replace flexible printed circuit board subassembly (404).

    C 1
  - Shutter's (H-41) lead wire (red, yellow, white) is not properly wired with flexible printed circuit board. ····· Resolder.

    C 2
- YES ↓

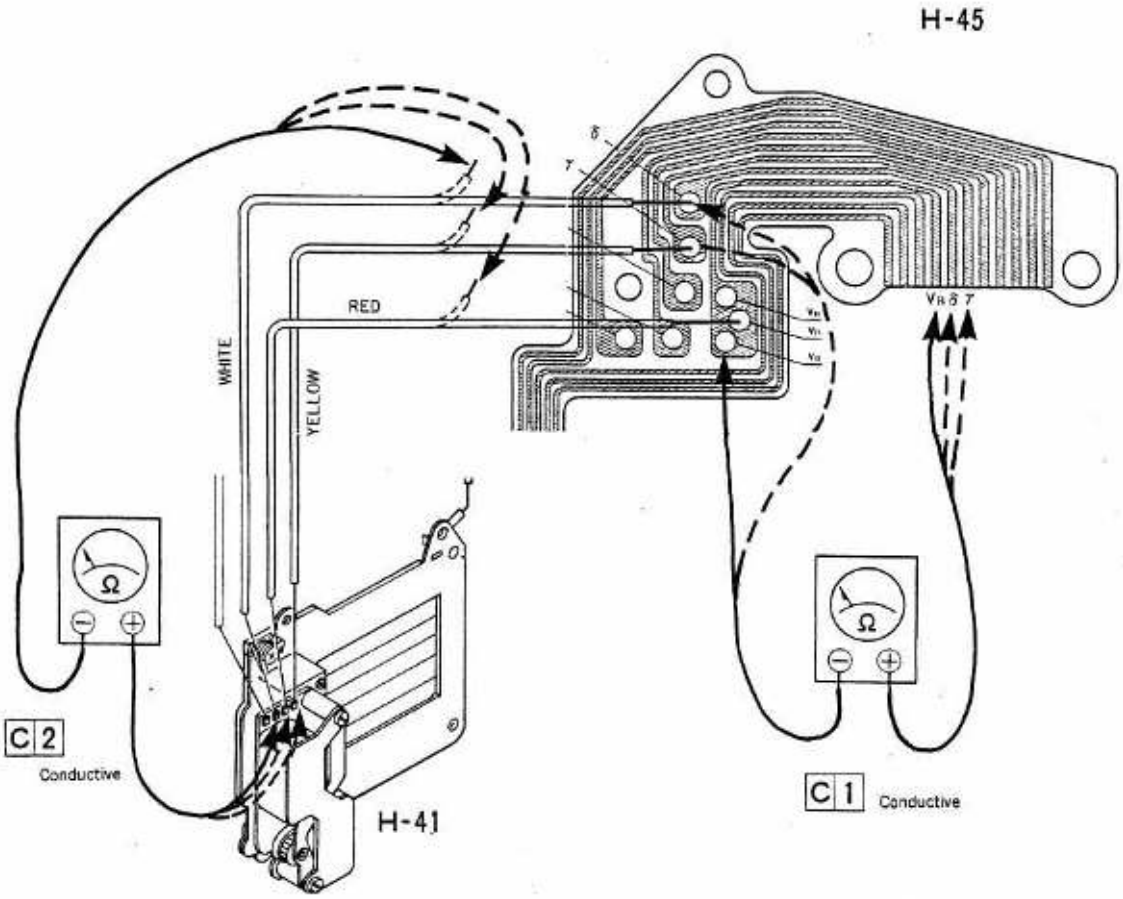

C	Power source	Lead wire	Measuring instrument	Range	Ascertainment
1	Not required		Tester	Ω	Conductive
2	Not required	Detach	Tester	Ω	Conductive

Does shutter properly operate by itself?

NO → The value of resistance between lead wire (red) and (yellow) and between (red) and (white) of shutter (H-41) is abnormal. ····· Resolder or replace shutter sub-assembly (402).

Specifiaction:

About 200 Ω

C 3

→ After shutter be set, lead and rear blades do not move even when shutter's lead wire (red) is connected with (+) of 5V electric source and (yellow) with (-) and then (white) with (-). ····· Resolder or replace shutter sub-assembly (402).

C 4

→ Blade driving spring (R-26) is out of position or deformed. ····· Adjust or replace shutter sub-assembly (402).

YES

Is AE amplifier in normal condition?

NO → Check and see if δ and γ terminals of AE amplifier's (B-25) IC16523P are properly soldered. ····· Resolder or replace AE amplifier (801).

→ AE amplifier's IC16523P does not emit δ and γ signals. ····· Replace AE amplifier (IC16523P is defective) (801).

C 5

YES

GOOD

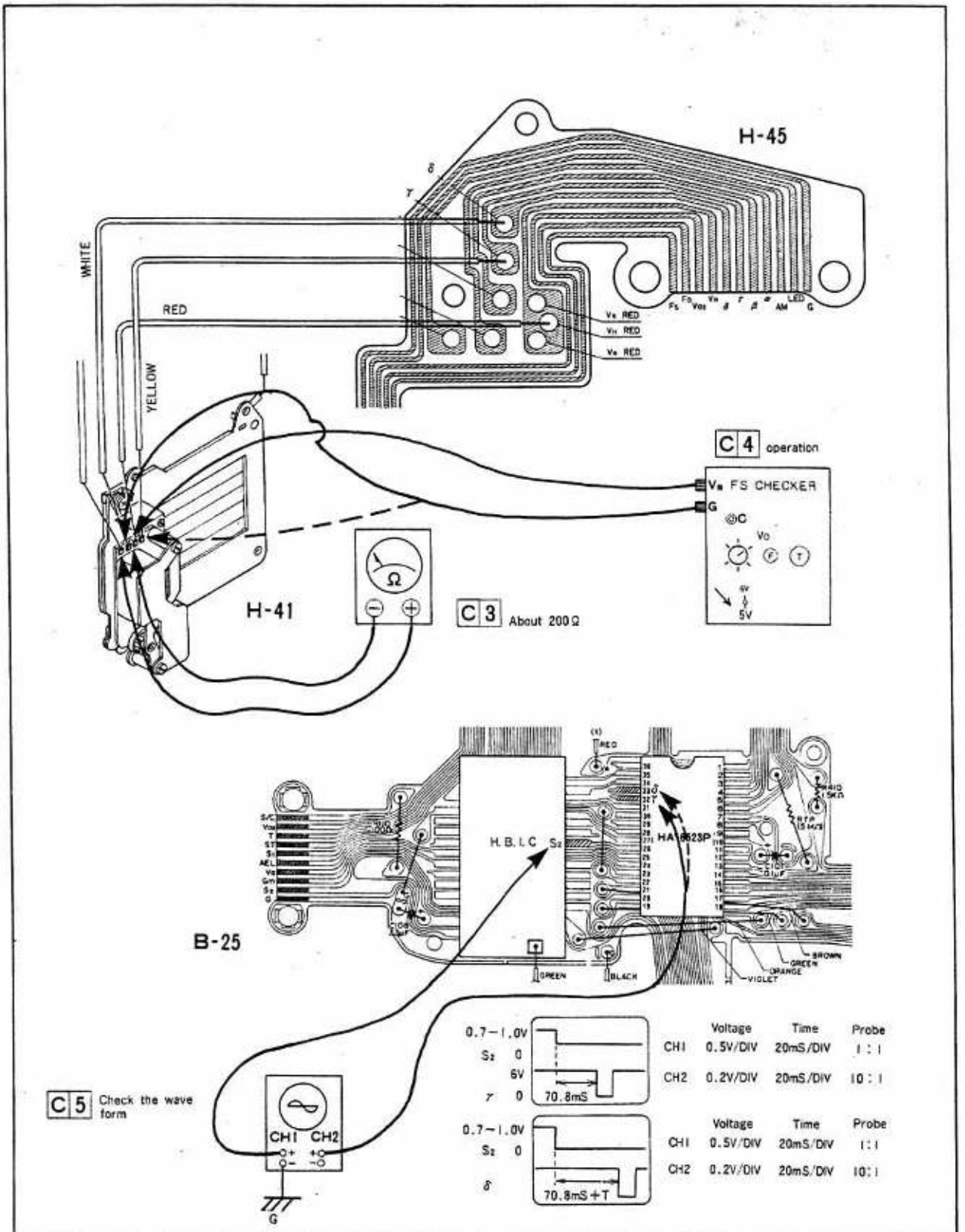

C	Power source	Lead wire	Measuring instrument	Range	Ascertainment
3	Not required		Tester	Ω	About 200Ω
4	Not required		FS checker	5V	Operation
5	Required (6V)		Oscilloscope	CH1 0.5V/DIV 20mS/DIV CH2 0.2V/DIV 20mS/DIV	Check the wave form (Probe CH1··· 1 : 1 CH2··· 10 : 1)

4-3-3 SHUTTER SPEED IS DEFECTIVE

- Shutter speed is unstable.
- Shutter speed always slips off in one and the same direction.
- Shutter speed is always highest.
- Shutter speed is always "B".

Is impressed voltage VO2 normal?

NO → VO2 of AE amplifier (B-25) is not properly adjusted. ····· Adjust.

Specification:

VO2 = 2.797 ~ 2.803V

C 1

NO → Voltage is abnormal at Vr1 and Vr2 on the AE amplifier (B-25). ····· Adjust or replace AE amplifier (801).

Specification:

Vr1 = 1 ~ 1.4V

Vr2 = 2.9 ~ 3.1V

C 2

YES ↓

Is T-resistor of shutter resistor properly conductive?

NO → Shutter resistor (B-7) to impressed standard voltage VO2 (2.800V) between the VO2 and ground, check and see output voltage between the T and ground. ····· Clean or replace shutter resistor (08002).

Specification:

T = 1.4V ±10mV (1/60)

C 3

YES ↓

Is AE amplifier's signals in normal condition?

NO → Wave form of IC16523P's terminal No.32 (γ) and terminal No.33 (δ) of AE amplifier (B-25) is abnormal. ····· Replace AE amplifier (801).

C 4

YES ↓

C1 2.797–2.803V

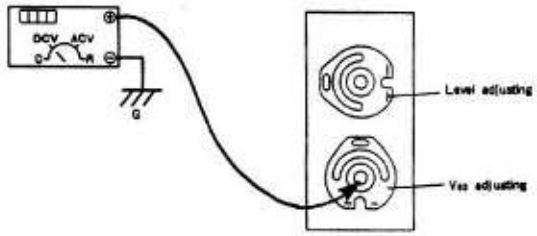

B-25

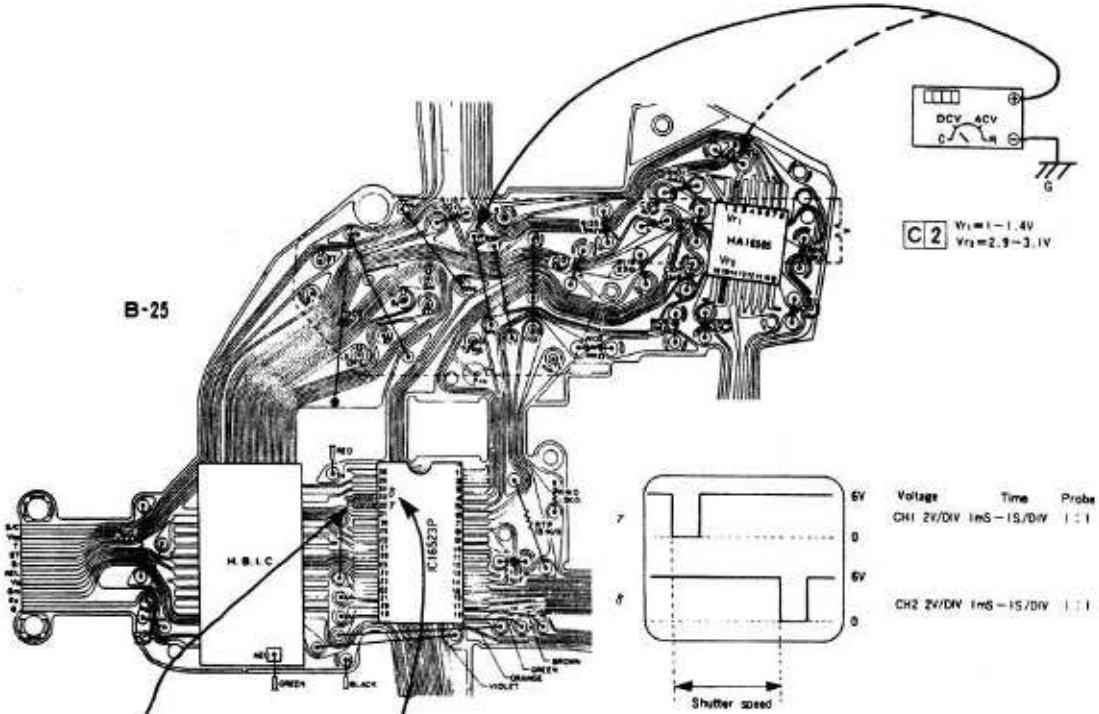

C3 1.4V±10mV(1/60)

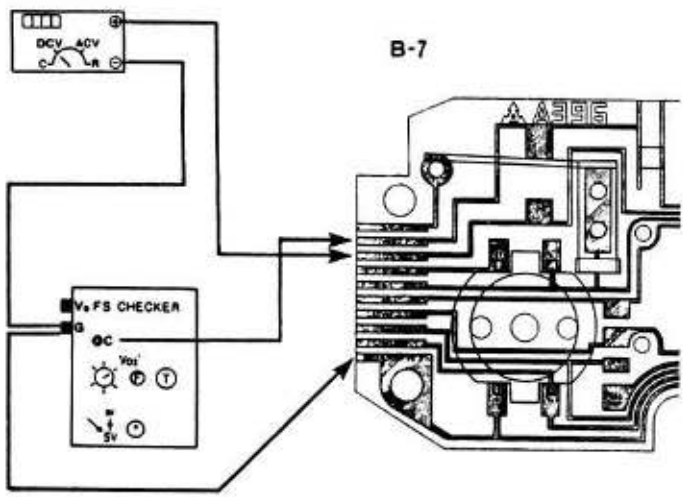

(T-resistor) ±10mV

Shutter speed	Voltage (V)	Shutter speed	Voltage (V)
8	2.5	1/30	1.5
2	2.1	1/60	1.4
1	2.0	1/125	1.3
1/2	1.9	1/250	1.2
1/4	1.8	1/500	1.1
1/8	1.7	1/1000	1.0
1/15	1.6		

■ T……⊕, G……⊖

C	Power source	Lead wire	Measuring instrument	Range	Ascertainment
1	Required (6V)		Digital voltmeter	V	2.797–2.803V
2	Required (6V)		Digital voltmeter	V	Vr1=1–1.4V, Vr2=2.9–3.1V
3	Not required	Detach	Digital voltmeter FS checker	2.8V	T=1.4V±10mV
4	Required (6V)		Oscilloscope	2V/DIV, 1mS–1S/DIV	Check the wave form (Probe 1:1)

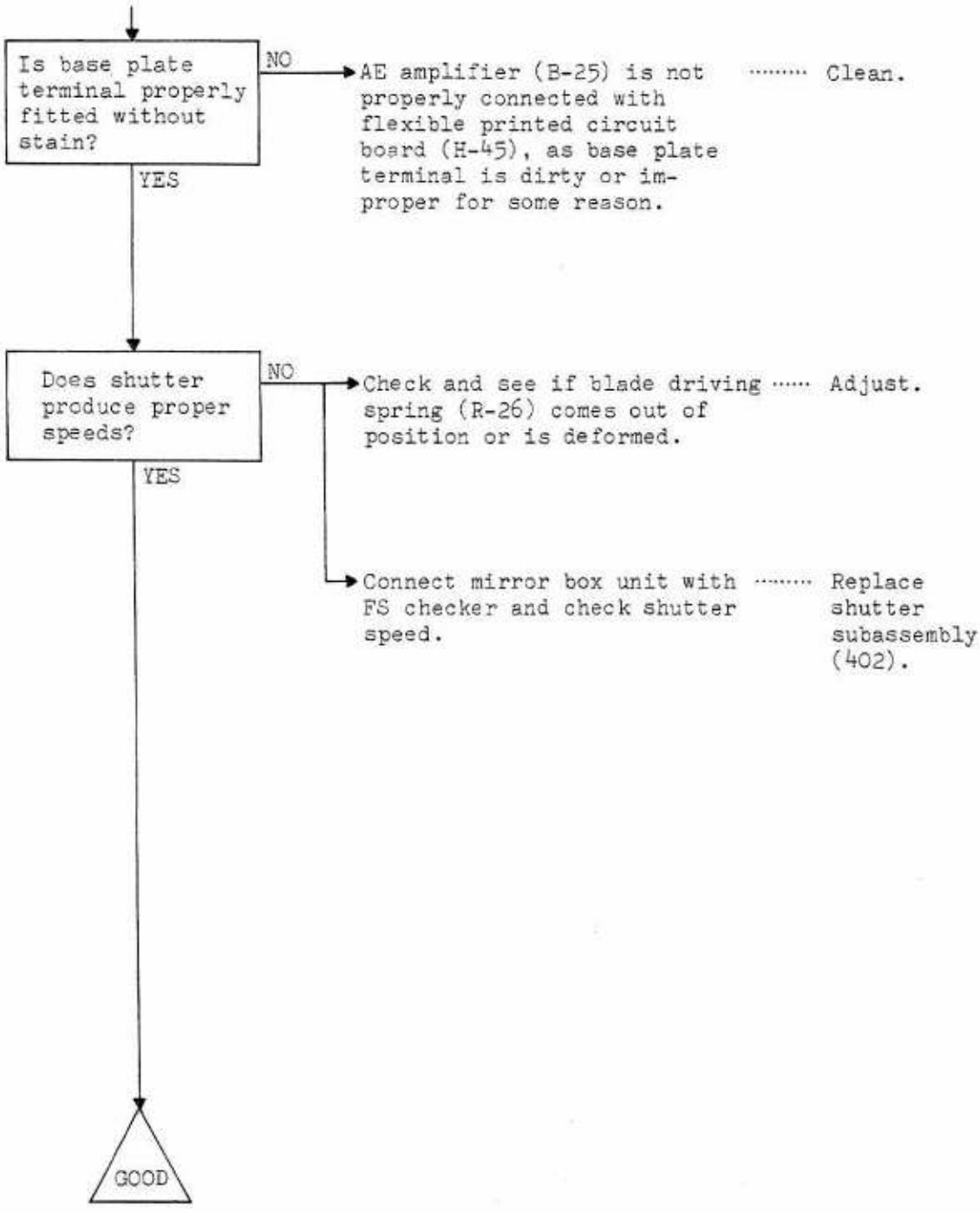
Is base plate terminal properly fitted without stain?
NO
AE amplifier (B-25) is not properly connected with flexible printed circuit board (H-45), as base plate terminal is dirty or improper for some reason.
Clean.
YES
Does shutter produce proper speeds?
NO
Check and see if blade driving spring (R-26) comes out of position or is deformed.
Adjust.
Connect mirror box unit with FS checker and check shutter speed.
Replace shutter subassembly (402).
YES
GOOD

4-3-4 SHUTTER CANNOT BE SET

Is shutter charge arm's action proper in range?

- NO → Check the way the shutter charge arm (L-9) is fitted. ····· Adjust.
- NO → Check and see if shutter charge gear (L-11) and shutter charge 2nd gear (L-15) are worn out. ····· Adjust or replace shutter charge plate subassembly (546).
- YES ↓

Can shutter be charged by itself?

- NO → The sticking plane of magnet is stained and neither 1st lever assembly (R-8) nor 2nd lever assembly (R-9) is sticked to magnet. ····· Adjust or clean.
- NO → Action of lead and rear blade armatures is so poor that they do not stick to magnet. ····· Adjust or replace shutter subassembly (402).
- NO → Lead blade hooked lever spring (R-22) or rear blade hooked lever spring (R-36) is out of position or deformed. ····· Adjust.
- NO → Check the way the lead blade driving arm subassembly (R-27) and lead blade hooked lever subassembly (R-23) are hooked and also check the way the rear blade hooked lever assembly (R-33) and rear blade hooked lever subassembly (R-35) are hooked. ····· Adjust.
- YES ↓

GOOD

4-4 RELEASE

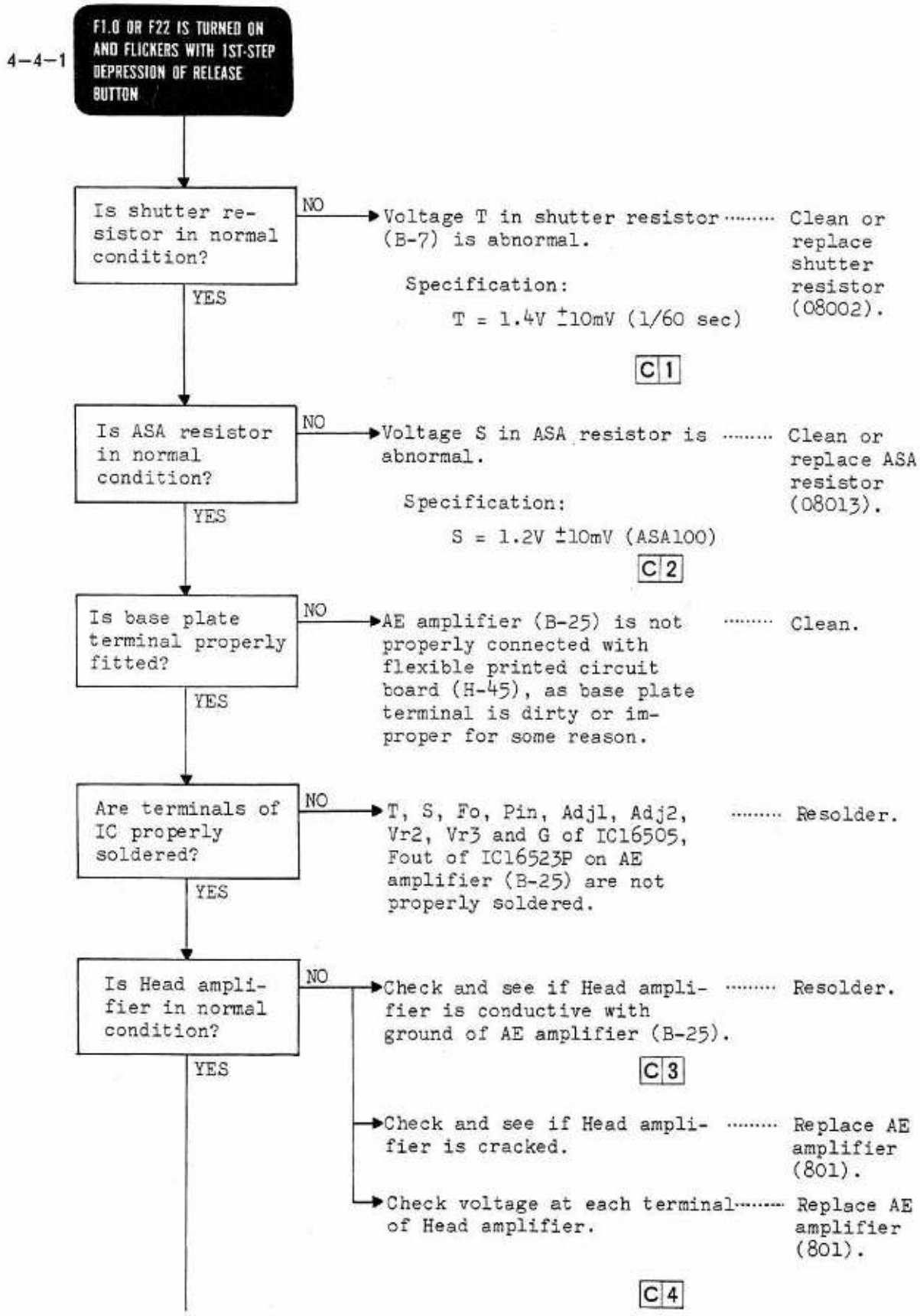
4-4-1
F1.0 OR F22 IS TURNED ON AND FLICKERS WITH 1ST-STEP DEPRESSION OF RELEASE BUTTON
Is shutter resistor in normal condition?
NO
Voltage T in shutter resistor (B-7) is abnormal.
Specification:
T = 1.4V ±10mV (1/60 sec)
Clean or replace shutter resistor (08002).
C 1
YES
Is ASA resistor in normal condition?
NO
Voltage S in ASA resistor is abnormal.
Specification:
S = 1.2V ±10mV (ASA100)
Clean or replace ASA resistor (08013).
C 2
YES
Is base plate terminal properly fitted?
NO
AE amplifier (B-25) is not properly connected with flexible printed circuit board (H-45), as base plate terminal is dirty or improper for some reason.
Clean.
YES
Are terminals of IC properly soldered?
NO
T, S, Fo, Pin, Adj1, Adj2, Vr2, Vr3 and G of IC16505, Fout of IC16523P on AE amplifier (B-25) are not properly soldered.
Resolder.
YES
Is Head amplifier in normal condition?
NO
Check and see if Head amplifier is conductive with ground of AE amplifier (B-25).
Resolder.
C 3
Check and see if Head amplifier is cracked.
Replace AE amplifier (801).
Check voltage at each terminal of Head amplifier.
Replace AE amplifier (801).
C 4
YES

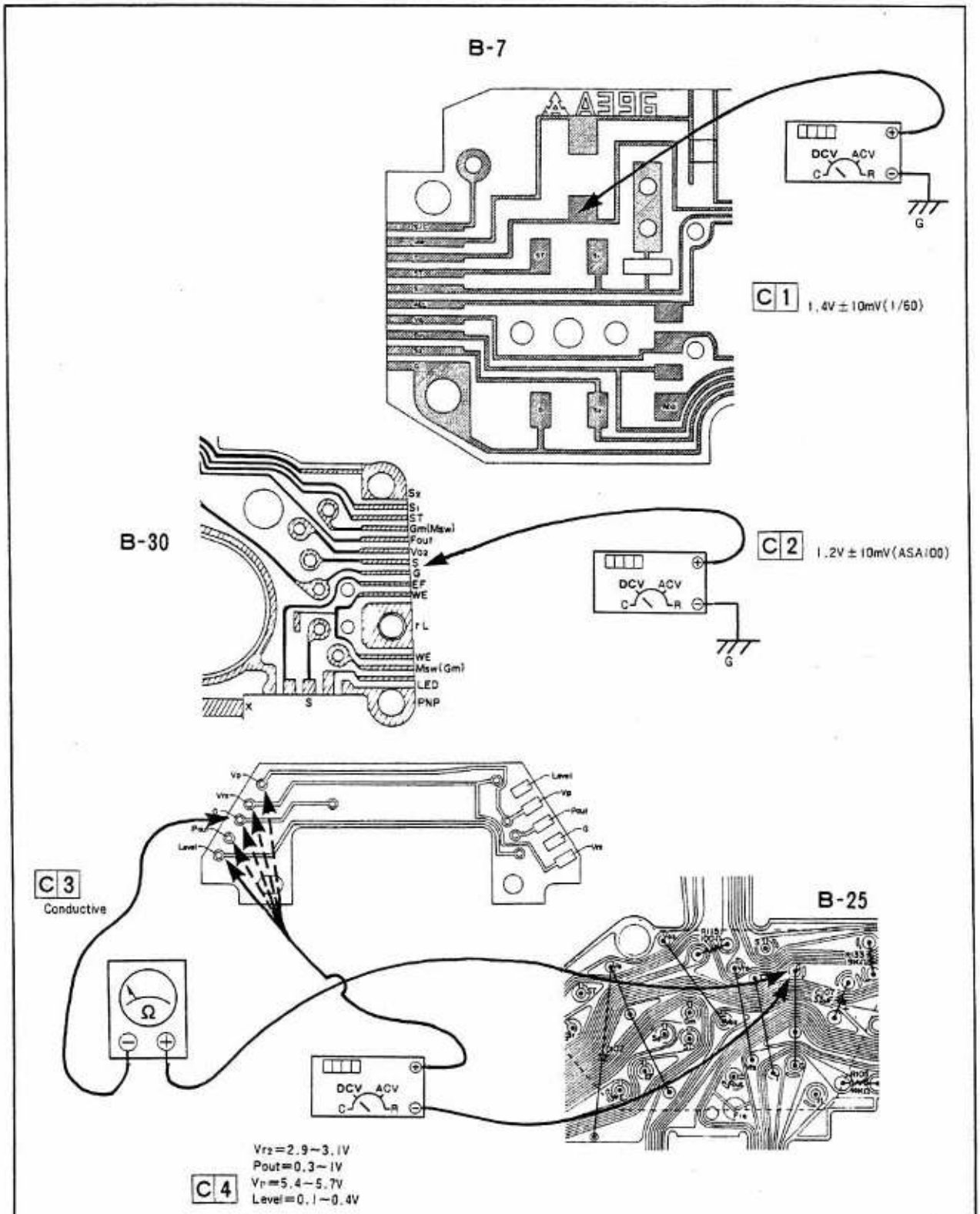

C	Power source	Lead wire	Measuring instrument	Range	Ascertainment
1	Required (6V)		Digital voltmeter	V	1.4V ± 10mV(1/60)
2	Required (6V)		Digital voltmeter	V	1.2V ± 10mV(ASA100)
3	Not required		Tester	Ω	Conductive
4	Required (6V)		Digital voltmeter	V	Vr2=2.9~3.1V, Pout=0.3~1V Vr=5.4~5.7V, Level=0.1~0.4V

Is voltage at Fout normal?

NO → When S1 is turned ON, voltage at terminals Vo2, Vr1, Vr2 and Vr3 is abnormal. ····· Adjust or replace AE amplifier (801).

Specifications:

Vo2 = 2.797 ~ 2.803V

Vr1 = 1.0 ~ 1.4V

Vr2 = 2.9 ~ 3.1V

Vr3 = 1.0 ~ 1.3V

Level = 0.1 ~ 0.4V

C 5

YES

→ When S1 is turned ON, voltage at Fout is abnormal. ····· Adjust or replace AE amplifier (801).

Specification:

LV 12

1/250 sec

Fout = 1.4V ±10mV

C 6

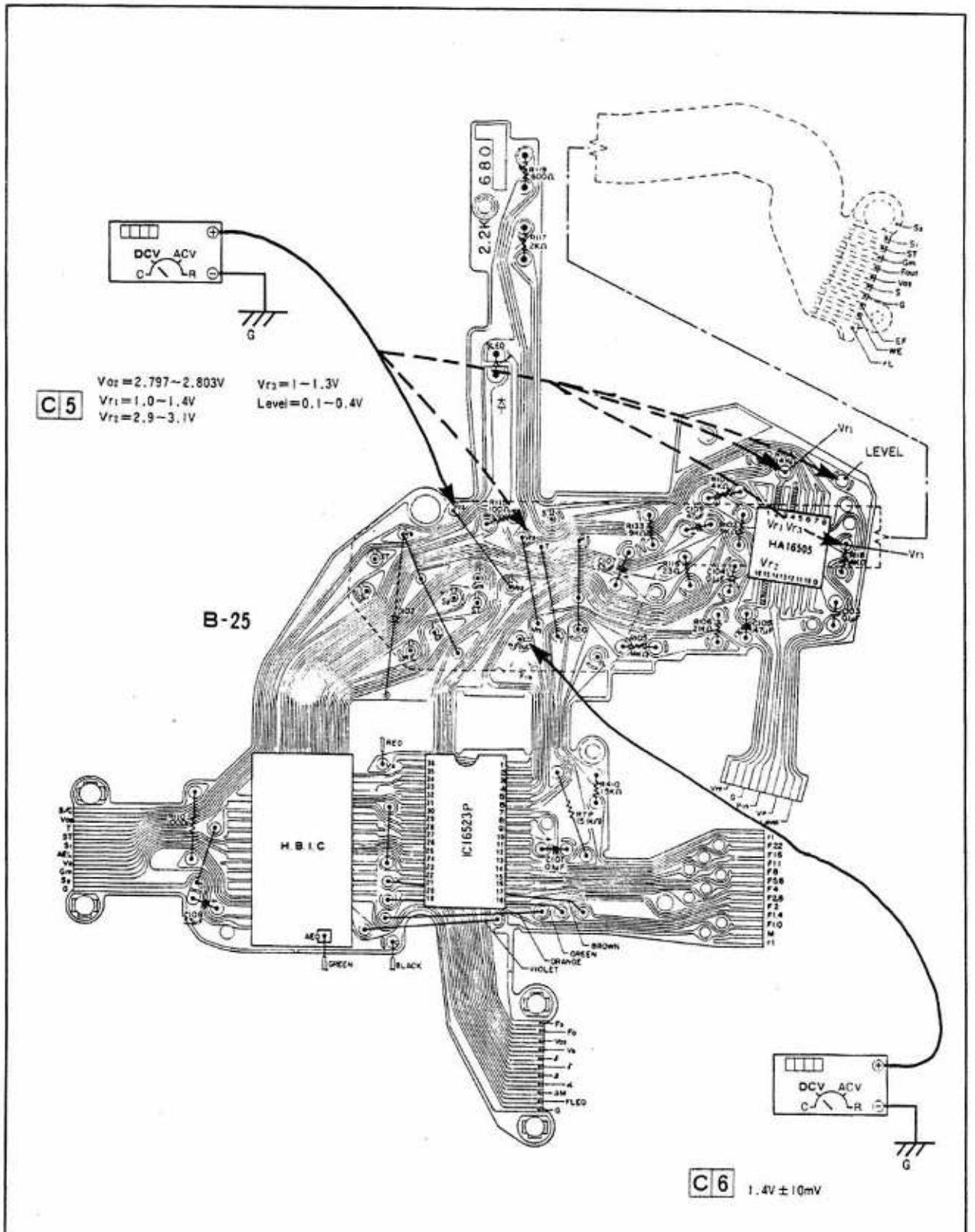

C	Power source	Lead wire	Measuring instrument	Range	Ascertainment
5	Required (6V)		Digital voltmeter	V	Vo2=2.797~2.803V, Vr1=1.0~1.4V, Vr2=2.9~3.1V, Vr3=1~1.3V, Level=0.1~0.4V
6	Required (6V)		Digital voltmeter	V	Fout=1.4V±10mV

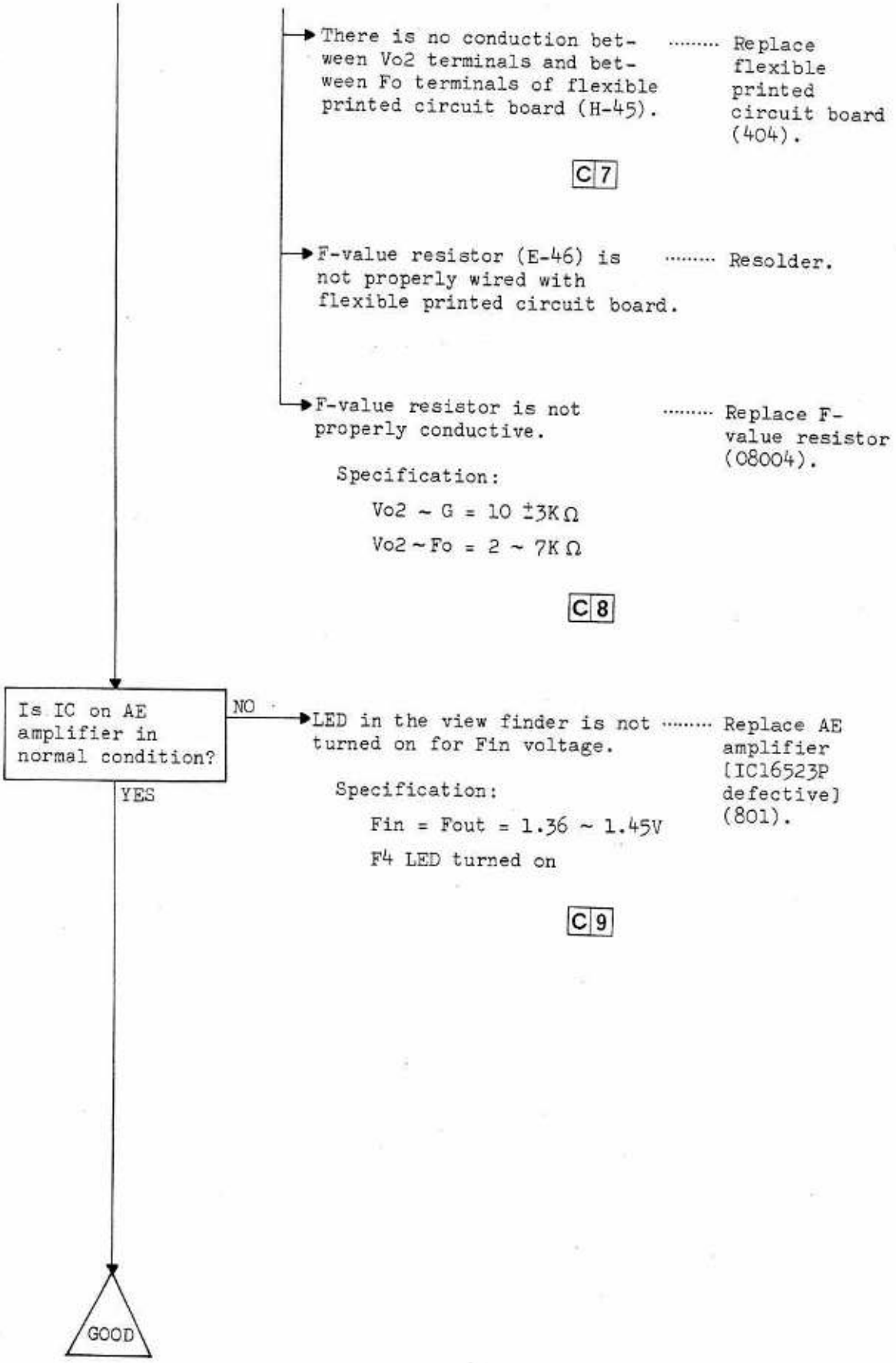
There is no conduction between Vo2 terminals and between Fo terminals of flexible printed circuit board (H-45).
Replace flexible printed circuit board (404).
C 7
F-value resistor (E-46) is not properly wired with flexible printed circuit board.
Resolder.
F-value resistor is not properly conductive.
Replace F-value resistor (08004).
Specification:
Vo2 ~ G = 10 ±3KΩ
Vo2 ~ Fo = 2 ~ 7KΩ
C 8
Is IC on AE amplifier in normal condition?
NO
LED in the view finder is not turned on for Fin voltage.
Replace AE amplifier [IC16523P defective] (801).
Specification:
Fin = Fout = 1.36 ~ 1.45V
F4 LED turned on
C 9
YES
GOOD

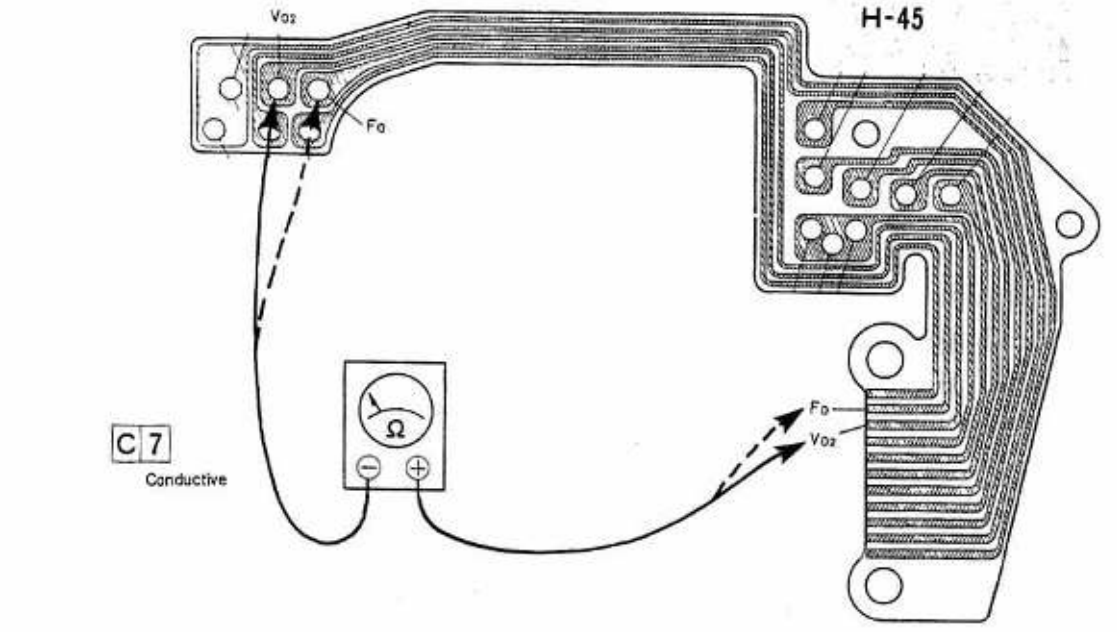

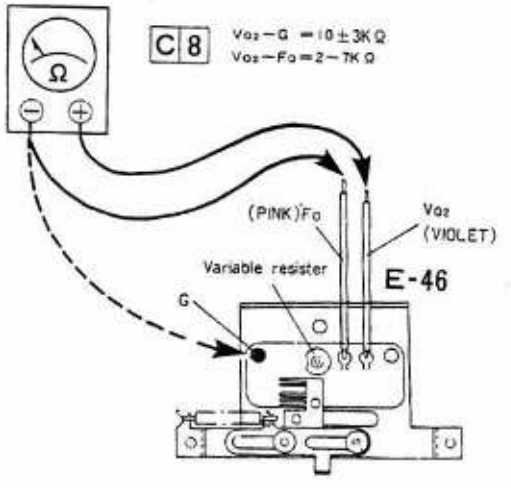

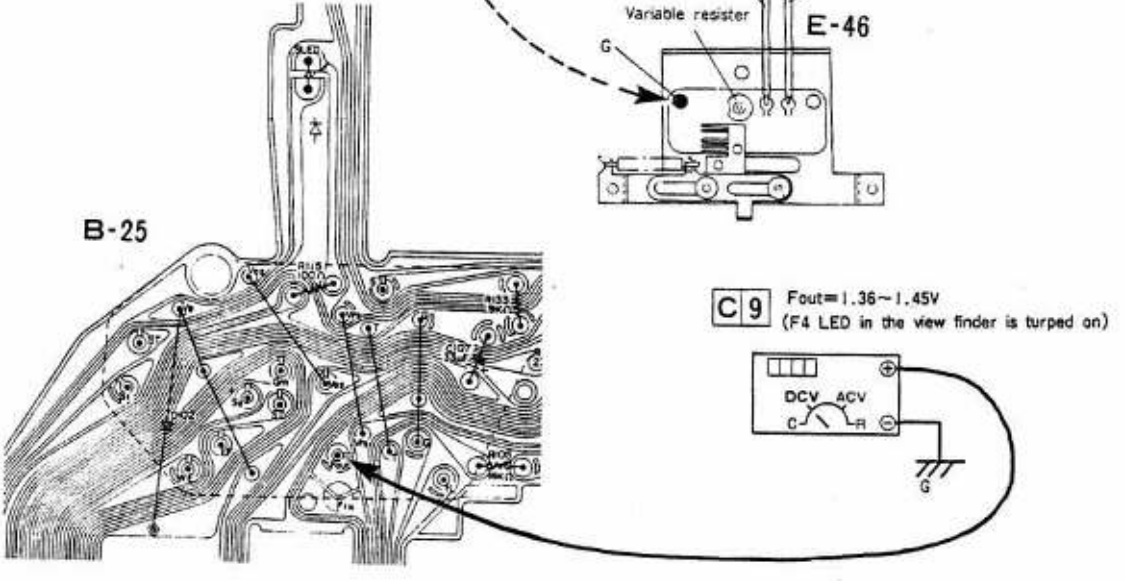

C	Power source	Lead wire	Measuring instrument	Range	Ascertainment
7	Not required	Detach	Tester	Ω	Conductive
8	Not required	Detach	Tester	Ω	Vo2~G=7~13KΩ、 Vo2~Fo=2~7KΩ
9	·Required (6V)		Digital voltmeter	V	Fout=1.36~1.45V(F4)

4-4-2 **LED IN THE VIEWFINDER IS NOT TURNED ON WITH 1ST-STEP DEPRESSION OF RELEASE BUTTON**

Is S1 operates normally condition?

NO → S1 of the shutter resistor (B-7) cannot be turned ON. ..... Resolder or replace the shutter resistor (08002).

C 1

→ The shutter resistor and the AE amplifier (B-25) are properly connected. ..... Clean.

YES ↓

Is dark current large?

YES → Dark current is more than 0.2mA. When switch S1 is turned ON, dark current is more than 20mA. ..... Refer to "4-11-2 Abnormal rundown of battery cells."

C 2

NO ↓

Is LED in the view finder in normal condition by itself?

NO → Even when tester has been connected with rL terminal of AE amplifier (B-25) and with terminals 11 ~ 21 of IC16523P, LED is not turned ON. ..... Replace AE amplifier (801).

Note: Set to "X1" renge of tester

C 3

YES ↓

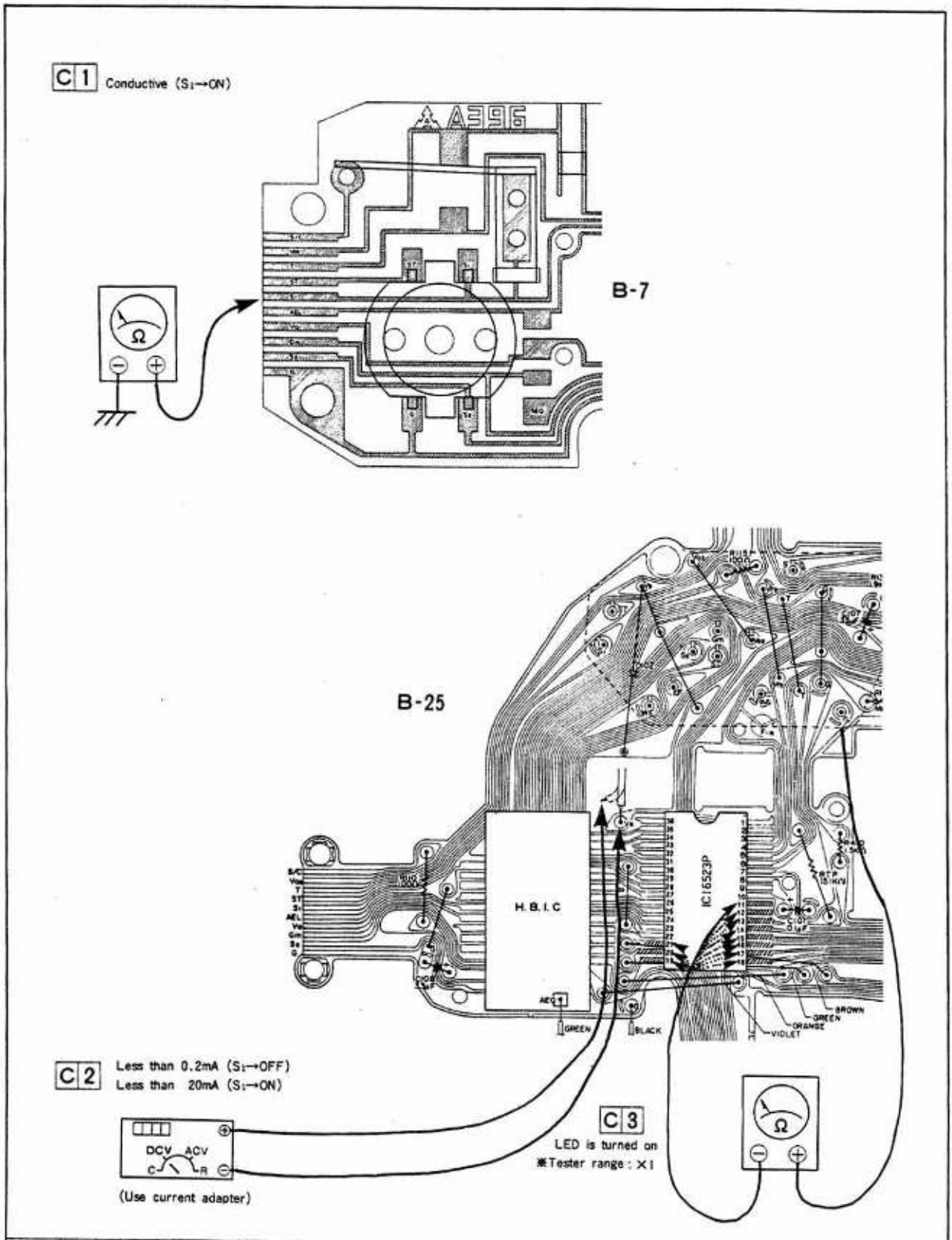

C	Power source	Lead wire	Measuring instrument	Range	Ascertainment
1	Not required		Tester	Ω	Conductive (S1→ON)
2	Required (6V)	Detach	Digital voltmeter	V	Less than 0.2mA (S1→OFF), Less than 20mA (S1→ON)
3	Not required		Tester	Ω(×1)	Each LED is turned on

Is AE amplifier properly connected with motor driving amplifier?

NO → Check the conduction of rL line between AE amplifier (B-25) and motor drive amplifier (C-16). ····· Clean.

C 4

YES ↓

Is AE amplifier normal?

NO → Check by the eye and see if terminals of Hybrid IC and IC16523P in AE amplifier (B-25) are properly soldered. ····· Resolder.

Hybrid IC → VB, VB' OS2, OS1, Vp, G terminals

IC16523P → VQ, Vp, Vr2, G, OS1, OS2, VB, terminals

C 5

→ When S1 is turned ON, voltage at terminals Vp and Vr2 of IC16523P is abnormal. ····· Replace AE amplifier (801).

Specification:

Vp = 5.4 ~ 5.7V

Vr2 = 2.9 ~ 3.1V

C 6

YES ↓

Is LED out of position?

NO → LED in AE amplifier (B-25) is not properly fitted to penta-prism carrier subassembly (J-4) by LED set screw (J-1). ····· Refit.

YES ↓

GOOD

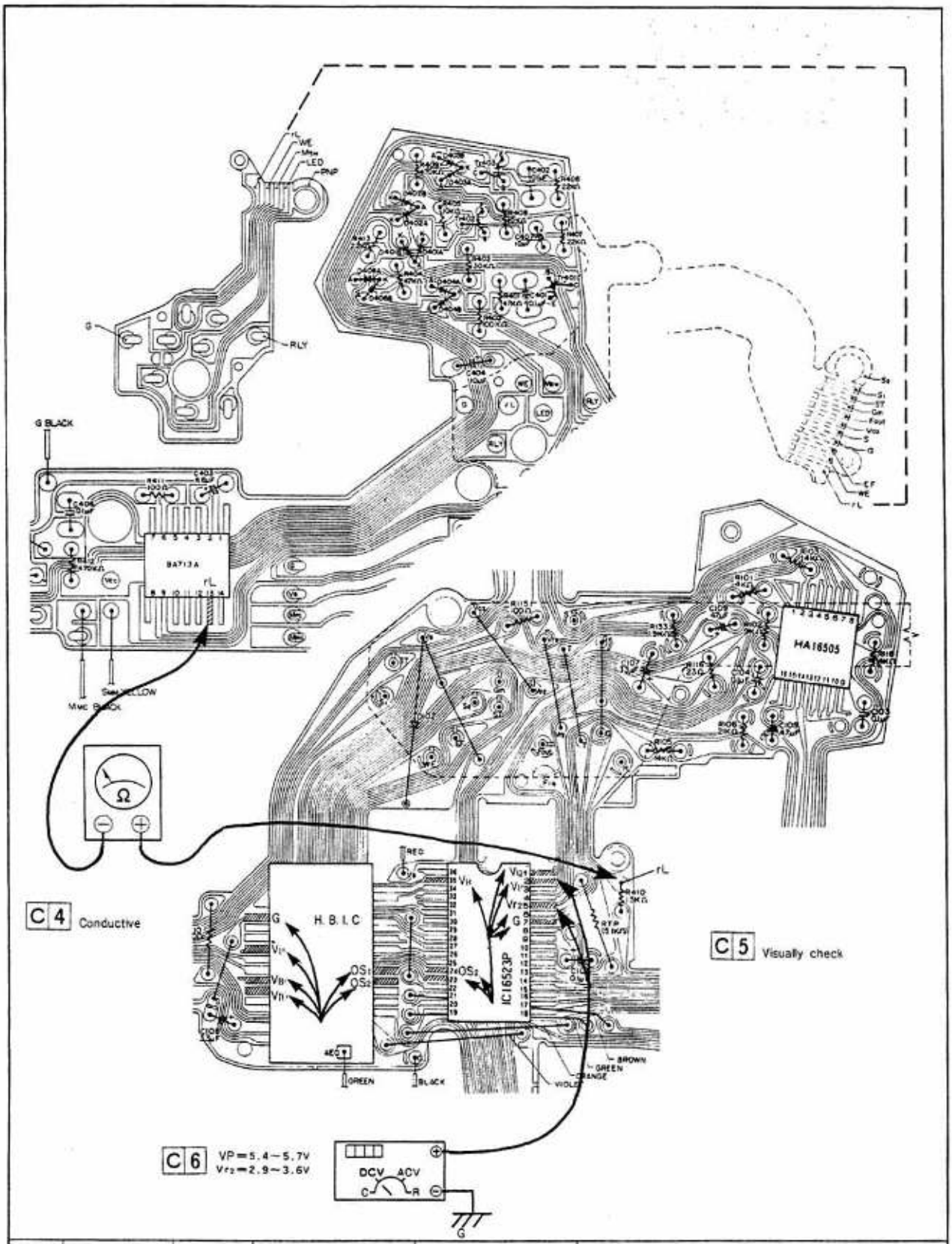

C	Power source	Lead wire	Measuring instrument	Range	Ascertainment
4	Not required		Tester	Ω	Conductive
5	Not required				Visually check
6	Required (6V)		Digital voltmeter	V	V_{r1}=5.4~5.7V, V_{r2}=3.0$^{+0.1}$V

4-4-3 **LED ALWAYS FLICKERS AT F5.6 OR F11 WITH 1ST-STEP DEPRESSION OF RELEASE BUTTON**

Is voltage at terminal No.22 (EF) of IC16523P normal?

NO → Voltage at terminal No.22 (EF) of IC16523P is abnormal. ..... Replace AE amplifier (801).

Specification:

EF = 2.0 ~ 3V (S1→ON)

* 0 ~ 1V .... Flickers at F5.6

5 ~ 6V .... Flickers at F11

C 1

YES → GOOD

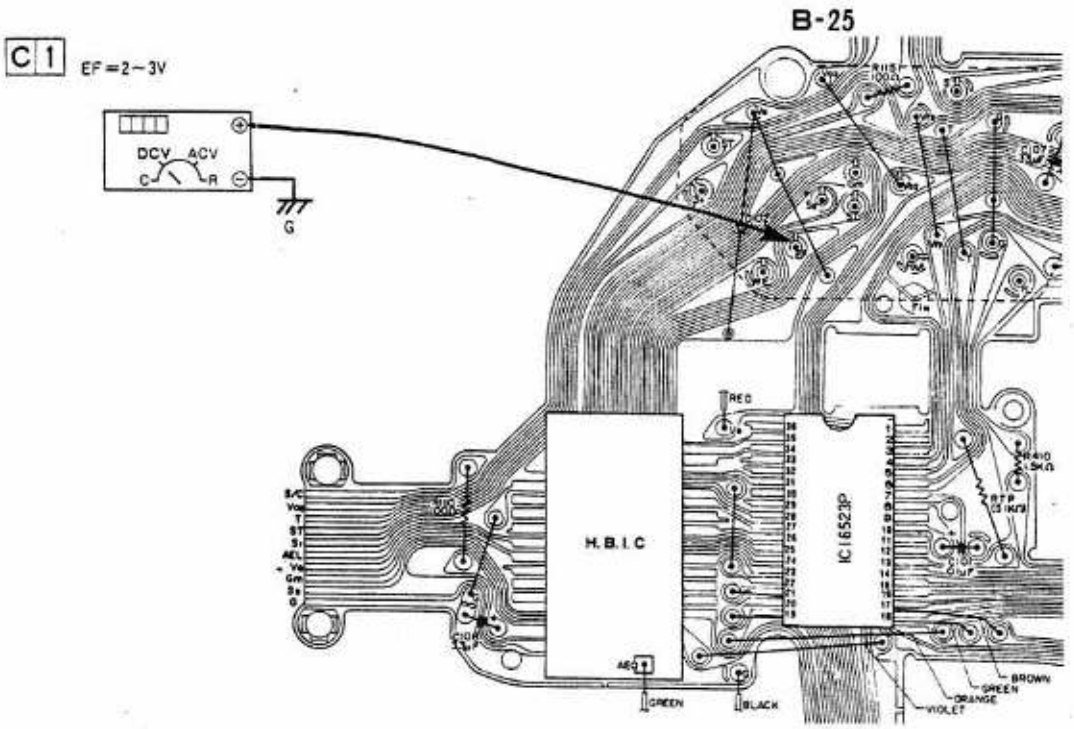

C	Power source	Lead wire	Measuring instrument	Range	Ascertainment
1	Required (6V)		Digital voltmeter	V	EF=2~3V

4-4-4 **LED DOES NOT FLICKER AT F5.6 OR F11 WITH 1ST-STEP DEPRESSION OF RELEASE BUTTON WHEN DEDICATED ELECTRONIC FLASH IS MOUNTED**

Factor: Indicators in the view finder are in normal condition when electronic flash is not mounted, electronic flash has been charged, and set to auto-mode (F5.6 or F11).

Does electronic flash emit signals?

- NO → Electronic flash does not emit charge signal. ····· Refer to "Electronic flash repair manual."
- YES ↓

Is terminal EF properly conductive?

- NO →
  - Check by the eye and see if the contact plane of electronic flash contact rivet (I-45) is dirty and also check its height. ····· Clean or replace hot shoe contact plate sub-assembly (513).
  - Soldering of electronic flash contact rivet and top cover F.P.C. (I-26) is improper or top cover F.P.C. is snapped. ····· Resolder or replace top cover F.P.C. (05158).

    C1
  - Base plate terminal is dirty. ····· Clean.

    C2
- YES ↓

Is auto-manual changeover proper?

- NO → Camera cannot be set to automatic mode. ····· Refer to "M-LED flickers with 1st-step depression of release button in AE mode." (4-4-7)
- YES ↓

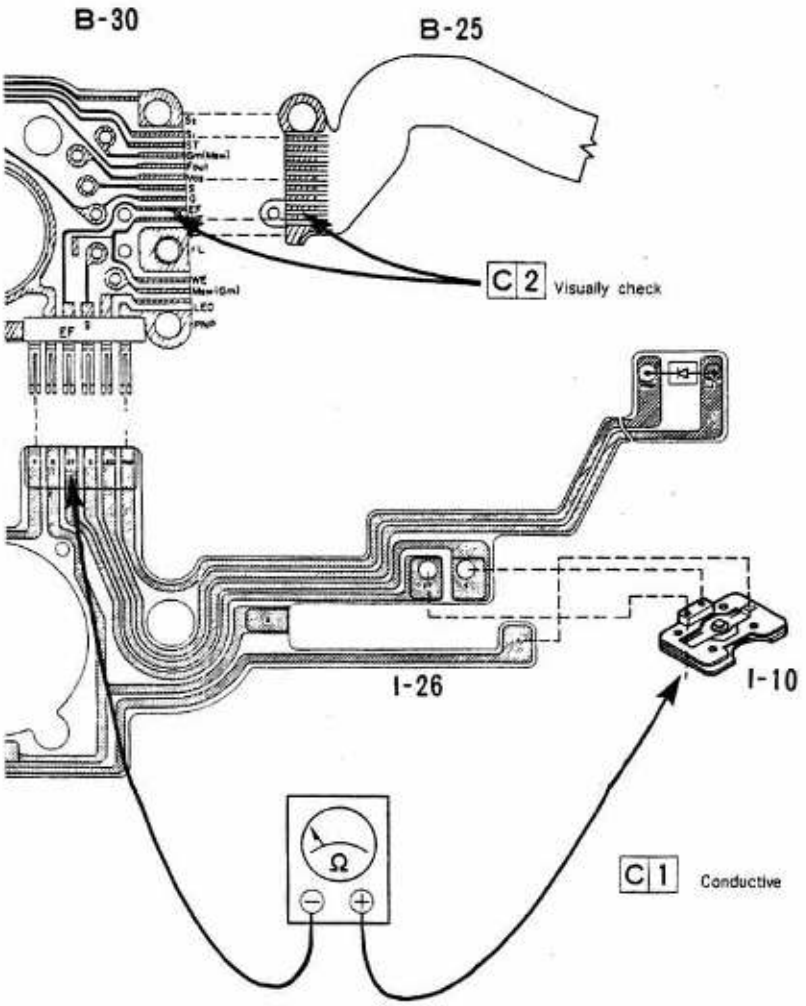

C	Power source	Lead wire	Measuring instrument	Range	Ascertainment
1	Not required		Tester	Ω	Conductive
2	Not required				Visually check

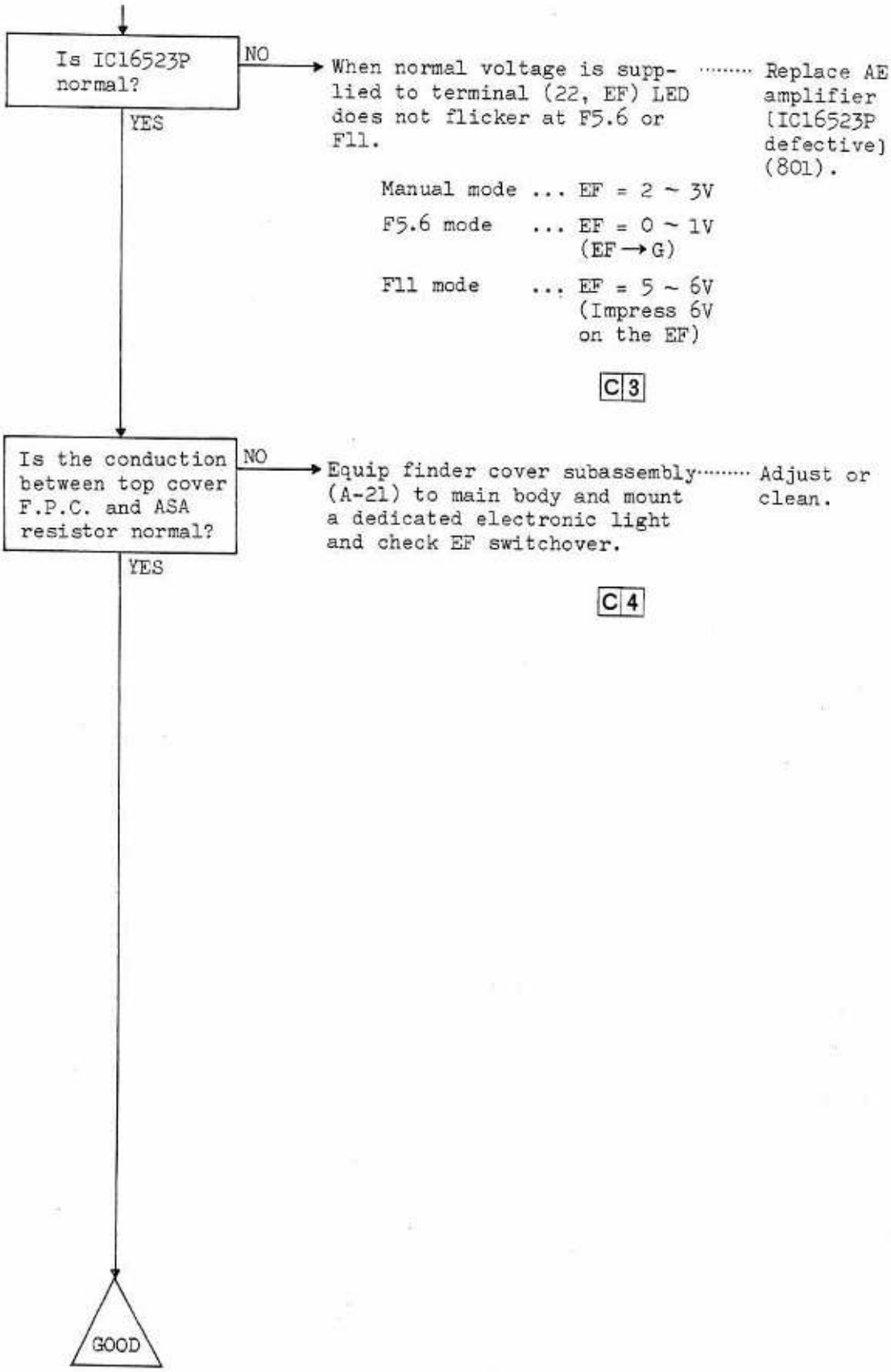
Is IC16523P normal?
NO
When normal voltage is supplied to terminal (22, EF) LED does not flicker at F5.6 or F11.
Replace AE amplifier [IC16523P defective] (801).
Manual mode ... EF = 2 ~ 3V
F5.6 mode ... EF = 0 ~ 1V (EF → G)
F11 mode ... EF = 5 ~ 6V (Impress 6V on the EF)
C 3
YES
Is the conduction between top cover F.P.C. and ASA resistor normal?
NO
Equip finder cover subassembly (A-21) to main body and mount a dedicated electronic light and check EF switchover.
Adjust or clean.
C 4
YES
GOOD

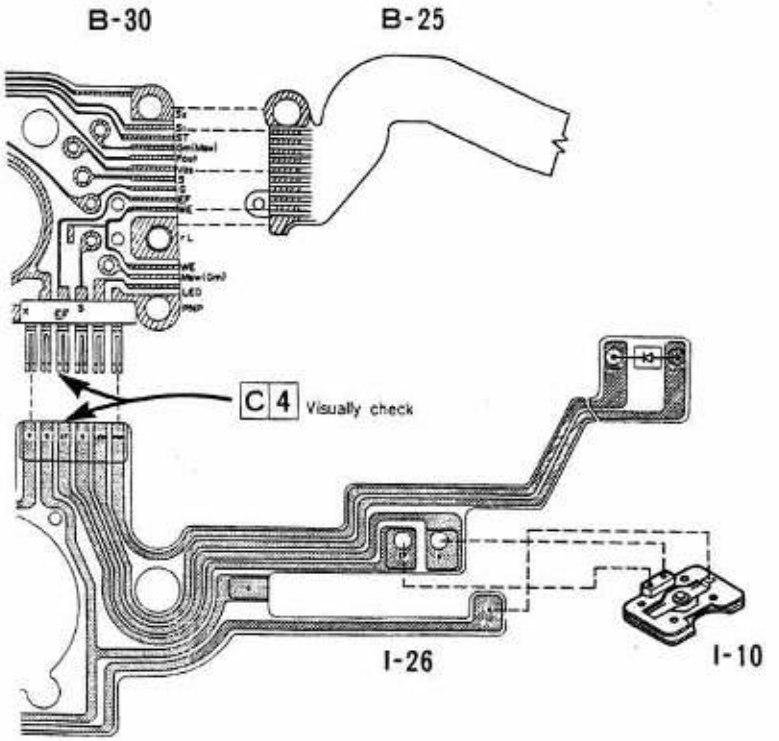

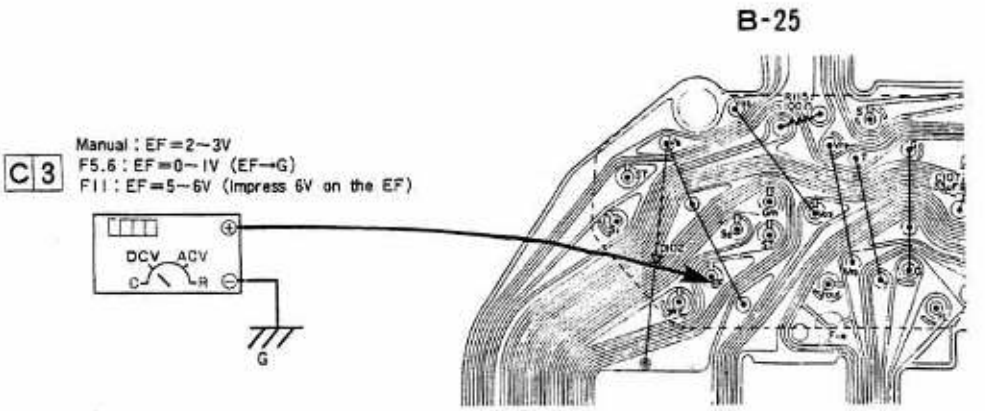

C	Power source	Lead wire	Measuring instrument	Range	Ascertainment
3	Required (6V)		Digital voltmeter	V	Manual :EF=2~3V,F5.6:EF=0~1V,F11:EF=5~6V
4	Not required				Visually check

4-4-5 **LED IN THE VIEWFINDER REMAINS TURNED ON WITHOUT RELEASE BUTTON DEPRESSED**

Is voltage of AE amplifier normal?

NO → Voltage at VQ, VP and S1 on AE amplifier (B-25) is abnormal. ..... Replace AE amplifier (801).

Specification:

S1 (OFF) ... VQ = 5 ~ 6V
Vp = 0V
S1 = 5 ~ 6V

S1 (ON) ... VQ = 0.1 ~ 1V
Vp = 5.4 ~ 5.7V
S1 = 0V

C1

YES → GOOD

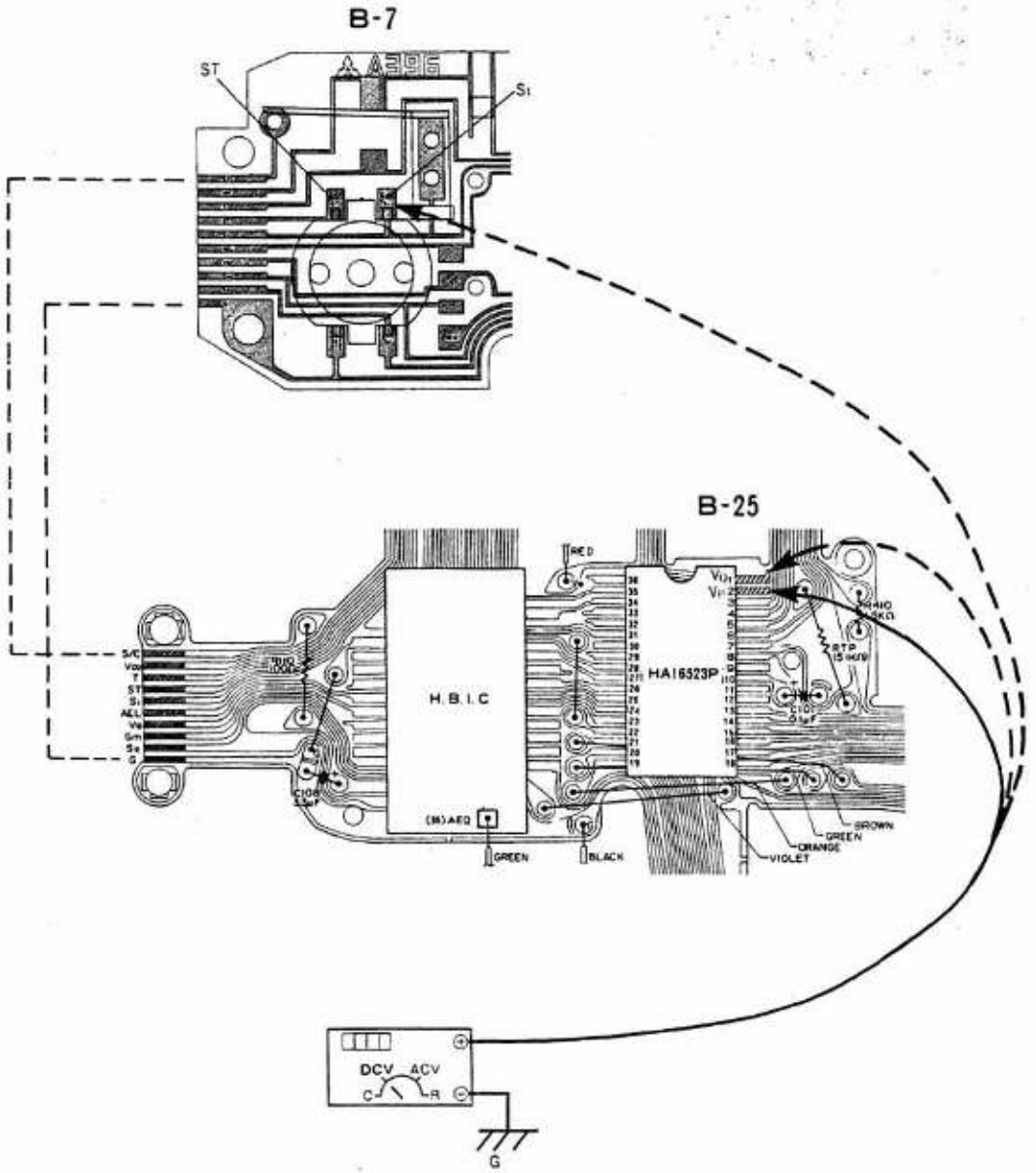

C 1 $S_1 \rightarrow OFF \cdots V_Q = 5 \sim 6V$ $V_P = 0V$ $S_1 = 5 \sim 6V$
$S_1 \rightarrow ON \cdots V_Q = 0.1 \sim 1V$ $V_P = 5.4 \sim 5.7V$ $S_1 = 0V$

C	Power source	Lead wire	Measuring instrument	Range	Ascertainment
1	Required (6V)		Digital voltmeter	V	S_1(OFF)$\cdots V_Q = 5 \sim 6V$, $V_P = 0V$, $S_1 = 5 \sim 6V$ S_1 (ON)$\cdots V_Q = 0 \sim 1V$, $V_P = 5.4 \sim 5.7V$, $S_1 = 0V$

4-4-6 **ALL LED'S ARE TURNED ON AND FLICKER IN THE VIEWFINDER WITH 1ST-STEP DEPRESSION OF RELEASE BUTTON**

Is AE amplifier's earth terminal properly earthed?

NO → Soldering of AE amplifier lead wire (Black, C-14) is improper or lead wire is snapped. ..... Resolder or replace lead wire (08107).

YES

Is AE amplifier in normal condition?

NO → The IC16523P terminal of the AE amplifier (B-25) is abnormal. ..... Replace the AE amplifier (801).

* Terminal No.11 ~ 21

C 1

YES

GOOD

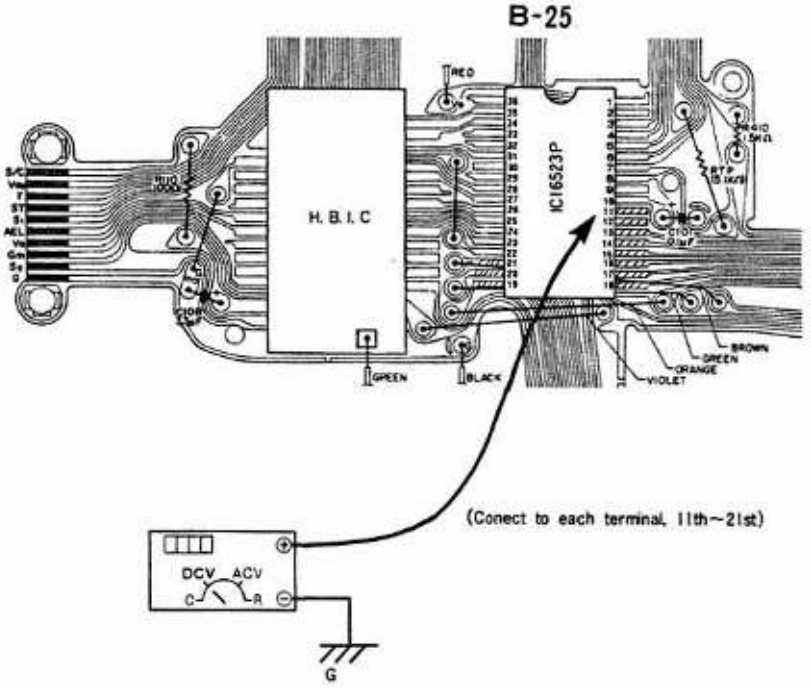

C 1 Voltage of corresponding terminal is about V_P

C	Power source	Lead wire	Measuring instrument	Range	Ascertainment
2	Required (6V)		Digital voltmeter	V	Voltage of corresponding terminal is about V_P

4-4-7

M-LED FLICKERS WITH 1ST-STEP DEPRESSION OF RELEASE BUTTON IN AE MODE

Does auto-manual changeover switch properly operate?

NO → Auto-manual changeover switch contact plate (J-21) and auto-manual contact pin (K-49) are not turned OFF in automatic mode. ····· Adjust switch.

C 1

NO → Auto-manual changeover switch lead wire (Black, J-18) is short-circuited with body. ····· Replace lead wire (08118).

C 2

YES

Is AE amplifier in normal condition?

NO → Voltage at AM terminal on AE amplifier (B-25) is abnormal. ····· Replace AE amplifier (801).

Specification:

AE ... 0.7 ~ 1V

Manual... 0V

C 3

YES

GOOD

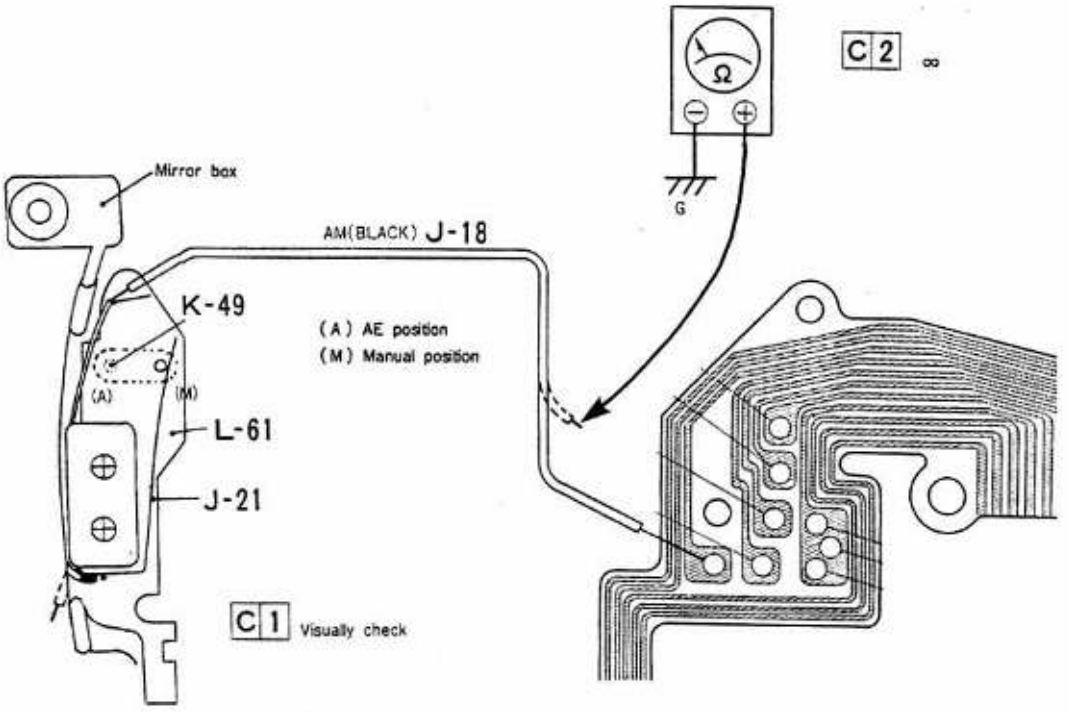

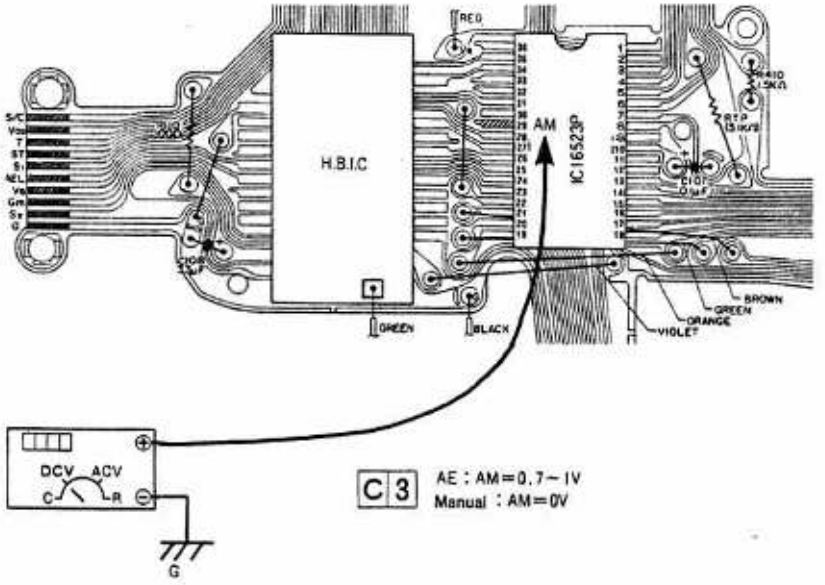

C	Power source	Lead wire	Measuring instrument	Range	Ascertainment
1	Not required				Visually check
2	Not required	Detach	Tester	Ω	∞
3	Required (6V)		Digital voltmeter	V	AE : AM=0.7~1V、 Manual : AM=0V

4-4-8 **LED IN THE VIEWFINDER IS NOT TURNED ON IN RIGHT POSITION WITH 1ST-STEP DEPRESSION OF RELEASE BUTTON**

Is applied voltage VO2 in normal condition?

NO → Voltage at AE amplifier's terminal VO2 is abnormal (B-25). ..... Adjust or replace AE amplifier (801).

Specification:

VO2 = 2,797 ~ 2,803V

C 1

YES ↓

Is voltage at AE amplifier's terminal level normal?

NO → Check Fout voltage of AE amplifier (B-25) with light sourece box. ..... Adjust or replace AE amplifier (801).

Factor : Light value LV12

Shutter speed 1/250 sec.

C 2

Specification:

Fout = 1.36 ~ 1.44V (Standard value for F4 is 1.4V).

Note: LED indicator in the view finder for F4 is also applicable to F2.8 ~ F5.6

→ A/D changeover is improperly adjusted. ..... Adjust or replace AE amplifier (801). Refer to "Basic adjustment of AE amplifier."

Specification:

Light value LV12

LED must be turned on:

at 1/1000 with F2

at 1/15 with F16

YES ↓

GOOD

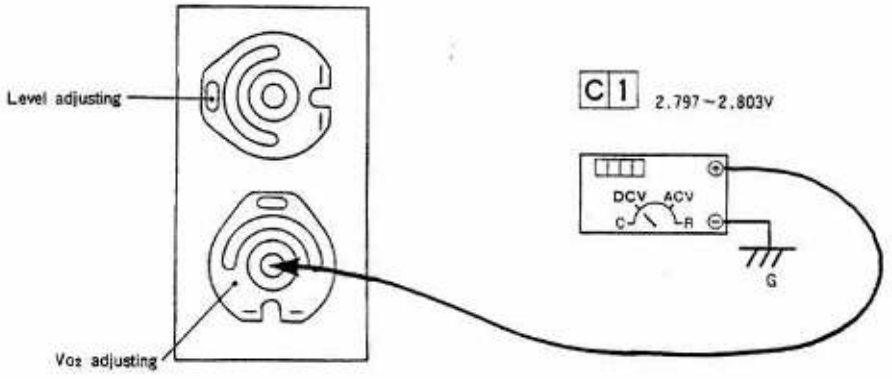

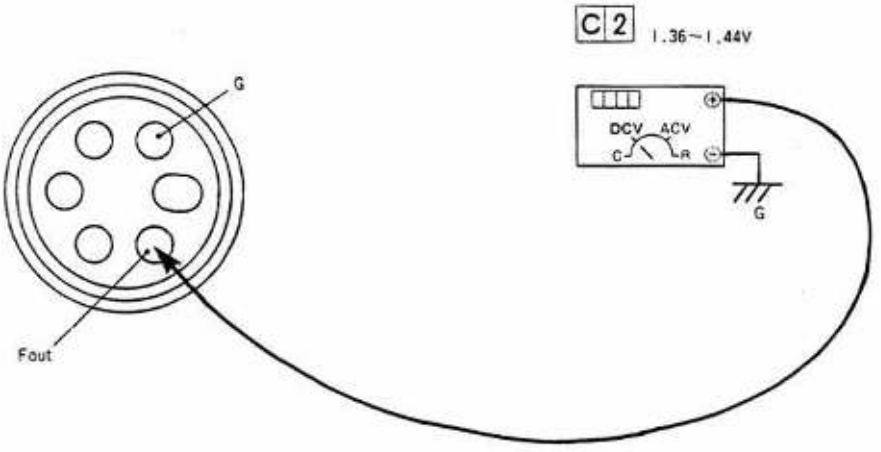

C	Power source	Lead wire	Measuring instrument	Range	Ascertainment
1	Required (6V)		Digital voltmeter	V	2.797~2.803V
2	Required (6V)		Digital voltmeter	V	1.36~1.44V

4-4-9 **BATTERY CHECK LED DOES NOT FLICKER WHEN BATTERY CELLS HAVE RUN DOWN**

Is AE amplifier in normal condition?

NO → Voltage VP and Vr2 applied on AE amplifier's IC16523P is abnormal (B-25). C1 ····· Replace AE amplifier (801) (IC16523P or IC16505 defective)

Specification:

Vr2 = 3.0 ±0.1V

VP = 4.4 ±0.1 ~ 4.9 ±0.1V

* Battery check LED flickers with VP voltage is in the aforesaid range.

YES → GOOD

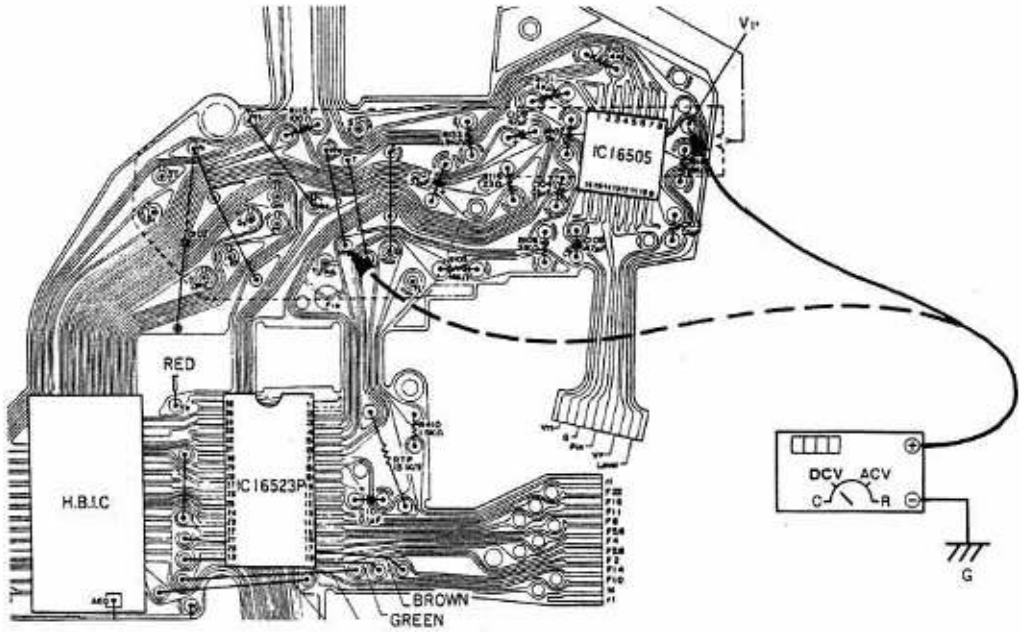

C 1 V_{r2}=3.0±0.1V
V_P=4.4±0.1~4.9±0.1V

C	Power source	Lead wire	Measuring instrument	Range	Ascertainment
1	required (5~6V)		Digital voltmeter	V	V_{r2}=3.0V±0.1V (Battery check LED flickers V_P=4.4±0.1~4.9±0.1V with V_P Voltage)

4-4-10 **BATTERY CHECK LED FLICKERS EVEN WHEN BATTERY CELLS ARE IN NORMAL CONDITION**

Is dark current large?

NO → Dark current is more than 0.2mA. When switch S1 is turned ON, dark current is more than 20mA. ..... Refer to "Abnormal rundown of battery cells." (4-11-2)

C 1

YES ↓

Is F-value resistor properly earthed?

NO → Soldering of F-value ground lead wire (Gray, E-45) is improper or lead wire is snapped. ..... Resolder or replace lead wire (08139).

YES ↓

GOOD

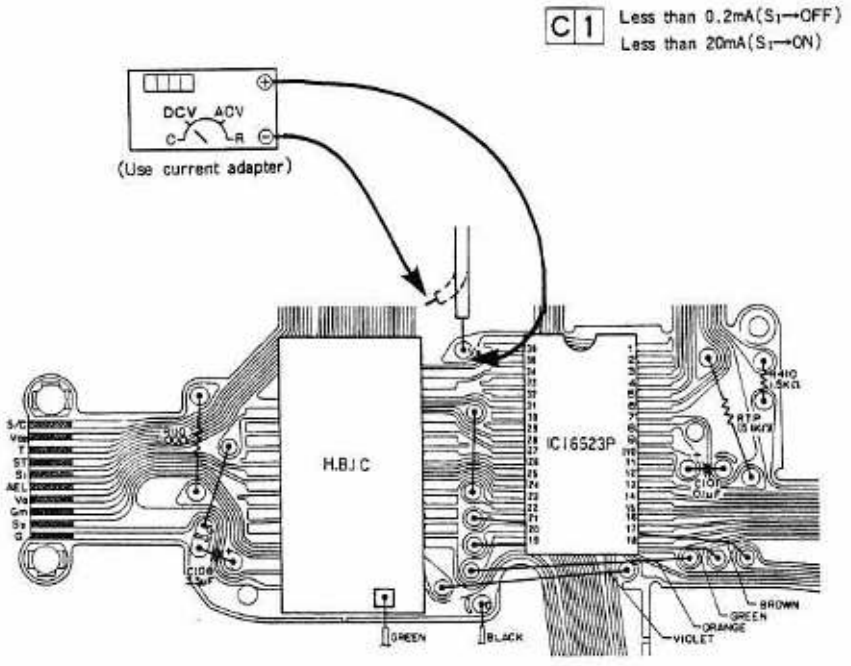

C	Power source	Lead wire	Measuring instrument	Range	Ascertainment
2	Required (6V)	Detach	Digital voltmeter	V	S_1→OFF··· Less than0.2mA , S_1→ON··· Less than20mA

4-4-11 CAMELA DOES NOT OPERATE WITH 2ND-STEP DEPRESSION OF RCLEASE BUTTON

Factor: LED in the view finder is turned OFF.

Does camera operate as earthing is done in the order of α, γ and δ.

- YES → AE amplifier (B-25) does not emit α, γ and δ signals. ..... Replace AE amplifier [IC16523P defective] (801).

C1

- NO ↓

Is base plate terminal properly fitted?

- NO → AE amplifier (B-25) is not properly connected with flexible printed circuit board (H-45), as base plate terminal is dirty or improper for some reason. ..... Clean.
- YES ↓

Is flexible printed circuit board and are lead wires properly connected?

- NO → Check and see if α, β, γ and δ patterns on flexible printed circuit board (H-45) are conductive. ..... Replace flexible printed circuit board subassembly (404).

C2

- NO → Check the way lead wires α, β, γ and δ are soldered on flexible printed circuit board. ..... Resolder.

C3

- YES ↓

B-25

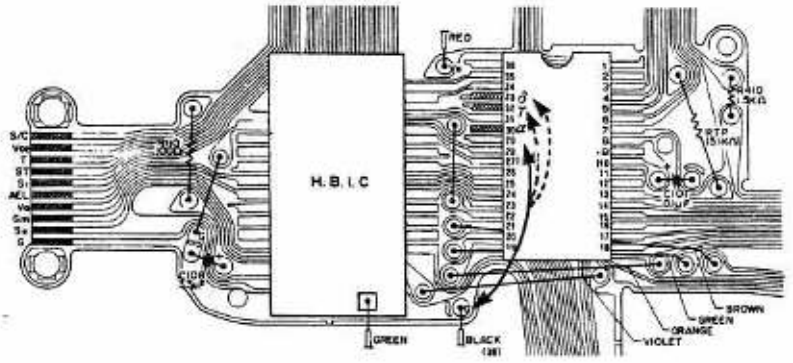

C 1

To be earthed in the order of α, γ and δ

(1) α earthed···Mirror flips up

(2) γ earthed···Shutter opens

(3) δ earthed···Shutter closes and wind motor rotates

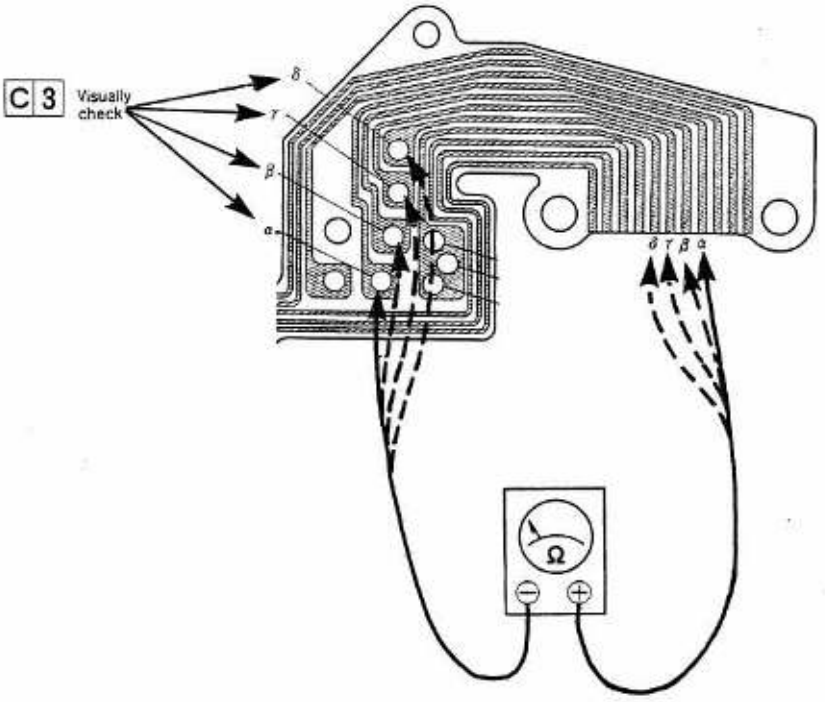

C 2 Conductive

C	Power source	Lead wire	Measuring instrument	Range	Ascertainment
1	Required (6V)				After being earthed in the order of α, γ, and δ, operate each magnet
2	Not required	Detach	Tester	Ω	Conductive
3	Not required				Visually check

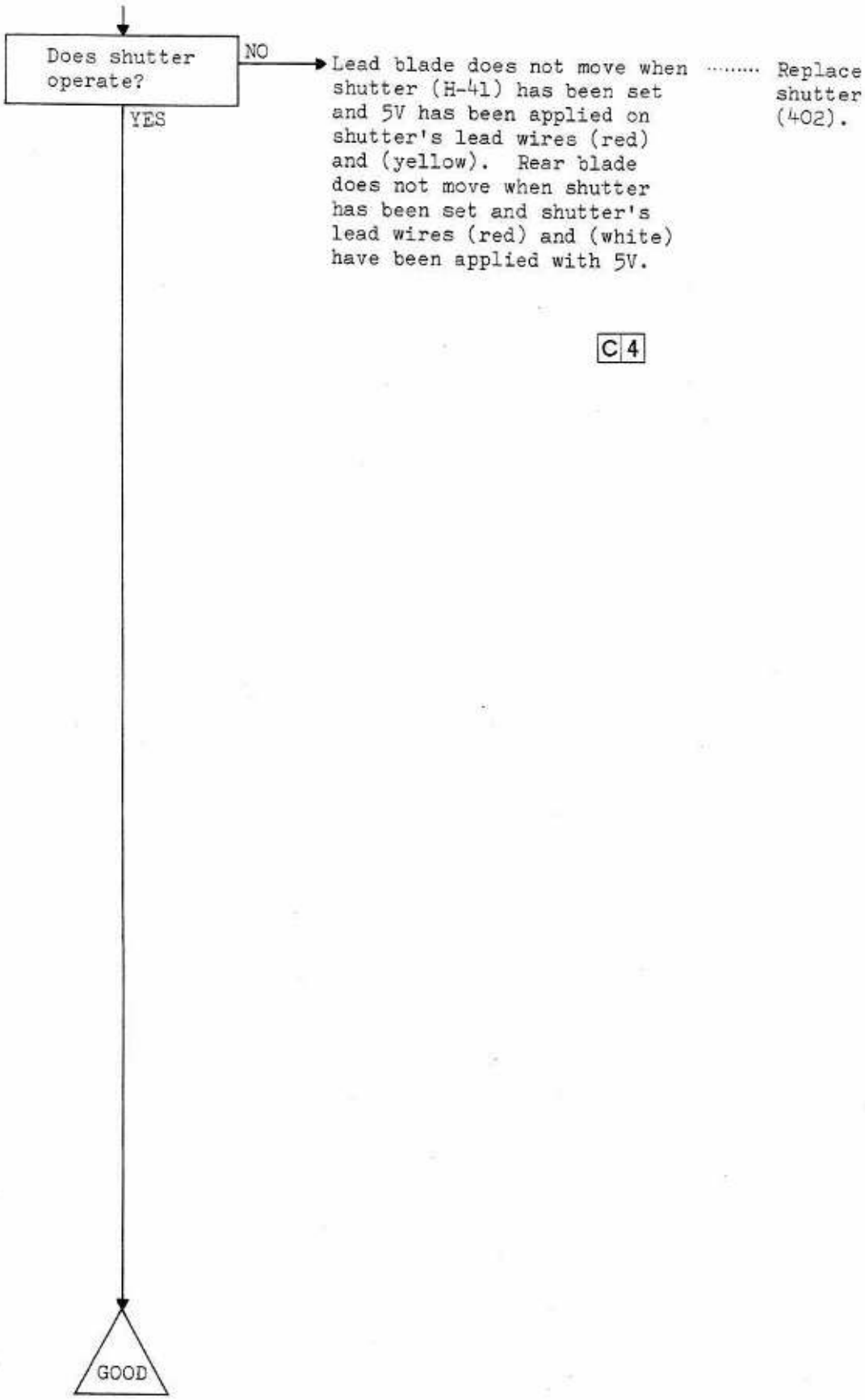
Does shutter operate?
NO
Lead blade does not move when shutter (H-41) has been set and 5V has been applied on shutter's lead wires (red) and (yellow). Rear blade does not move when shutter has been set and shutter's lead wires (red) and (white) have been applied with 5V.
Replace shutter (402).
C 4
YES
GOOD

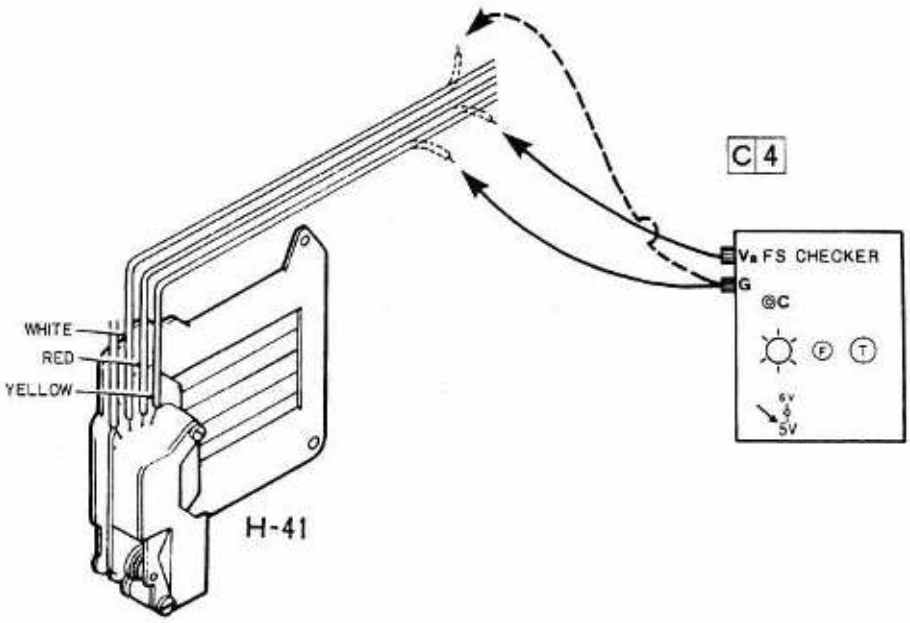

C	Power source	Lead wire	Measuring instrument	Range	Ascertainment
4	Not required	Detach	FS checker	5V	Operation

4-4-12 **CAMERA DOES NOT OPERATE WITH 2ND-STEP DEPRESSION OF RELEASE BUTTON**

Factor: LED in the view finder remains turned ON.

Camera operates when IC16523P's terminal S2 has been short-circuited with 1st-phase depression of release button.

- YES → Shutter resistor (B-7) is not properly connected with AE amplifier (B-25). ····· Clean.
- YES → With 2nd-phase depression of release switch, shutter resistor's S2 is not conductive with ground terminal. ····· Resolder or replace shutter resistor (08002).

C 1

- NO ↓

Is AE amplifier normal?

- NO → WE voltage is abnormal. ····· Replace AE amplifier (801).

C 2

- YES ↓

Is SMF properly turned ON and OFF?

- NO → Wind switch contact plate (F-51) have been short-circuited with earth pin (G-51). ····· Adjust.

C 3

- YES ↓

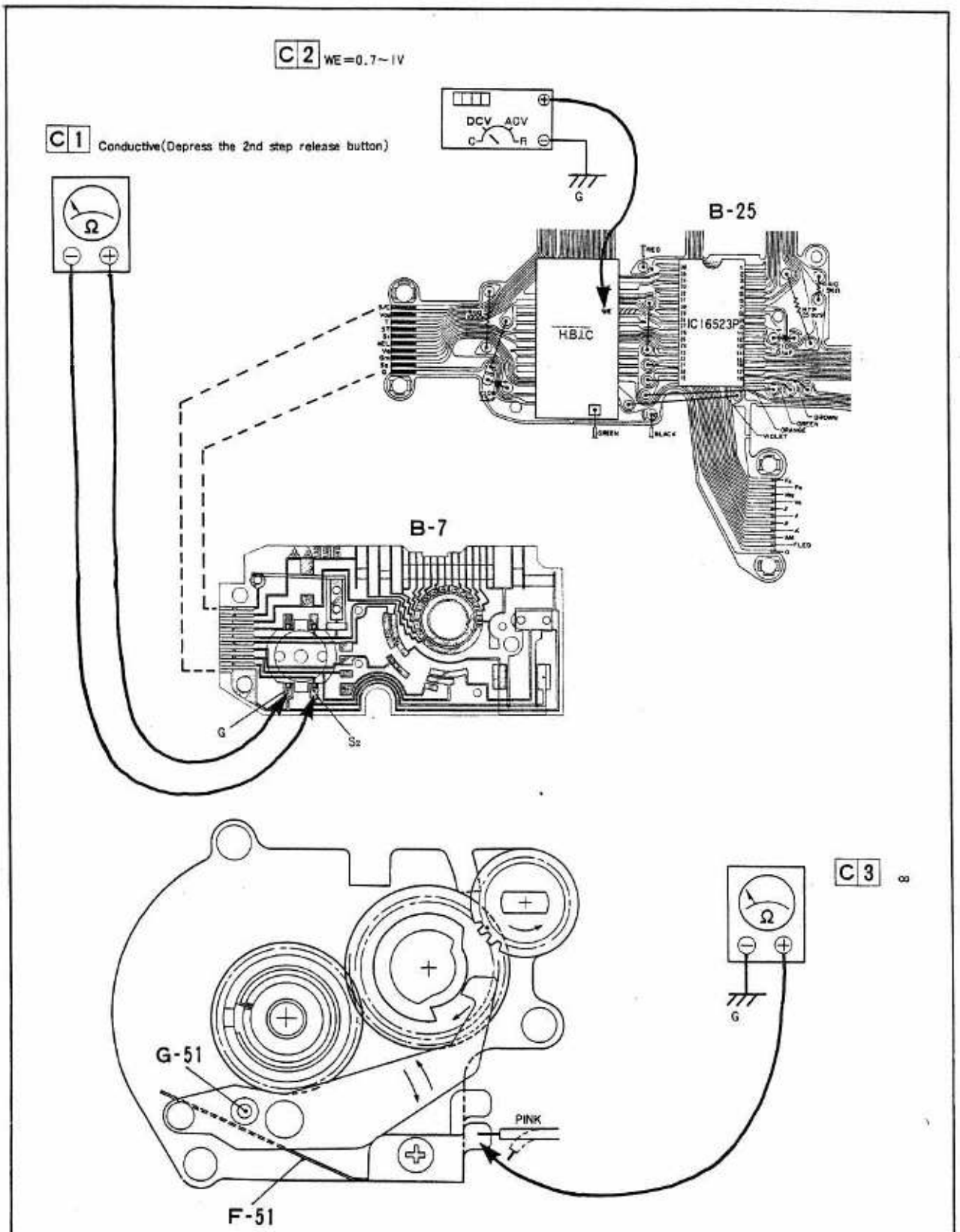

C	Power source	Lead wire	Measuring instrument	Range	Ascertainment
1	Not required	Detach	Tester	Ω	Conductive (Depress the 2nd step release button)
2	Required (6V)		Digital voltmeter	V	WE=0.7~1V
3	Not required	Detach	Tester	Ω	∞

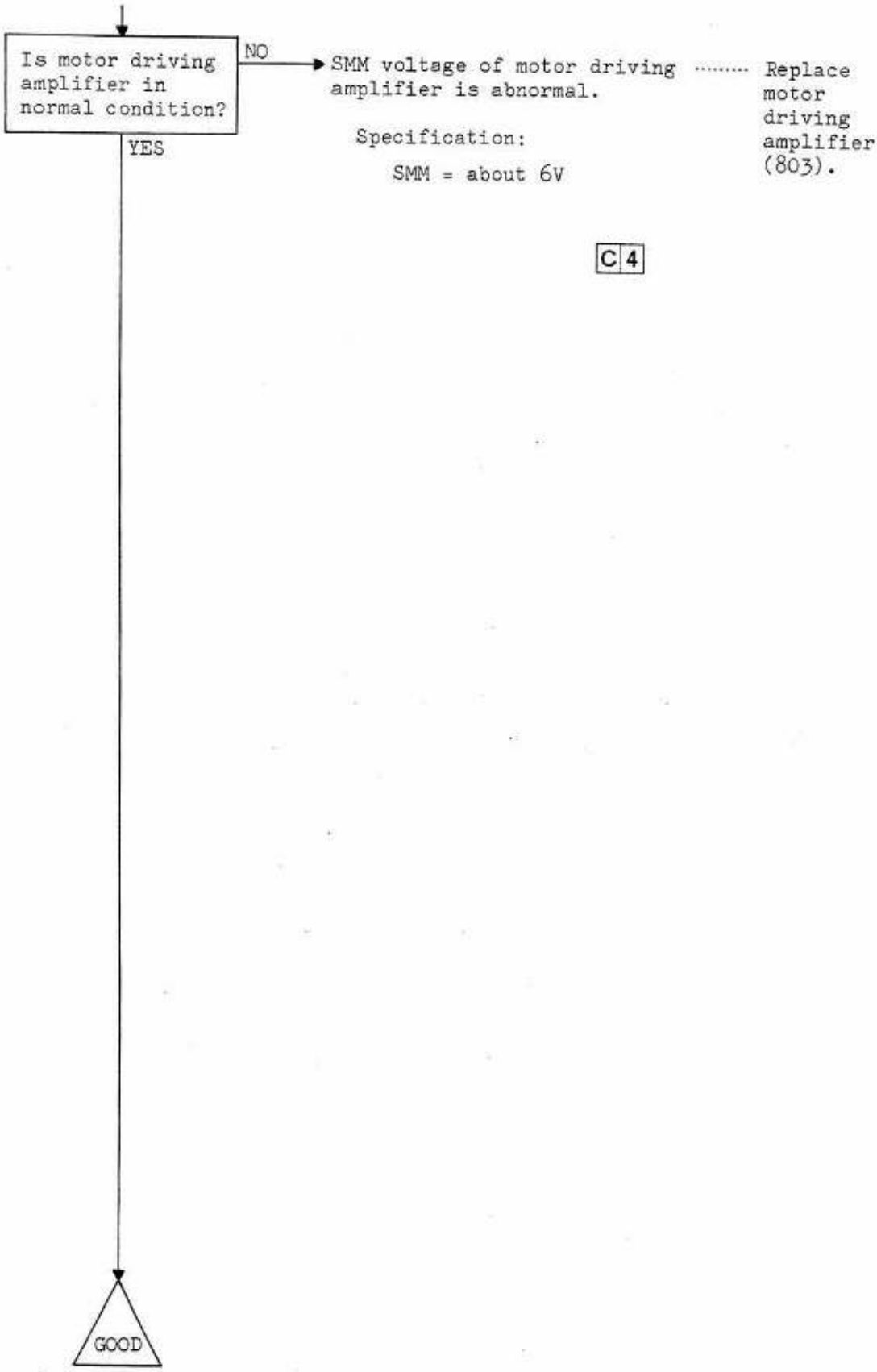
Is motor driving amplifier in normal condition?
NO
SMM voltage of motor driving amplifier is abnormal.
Specification:
SMM = about 6V
Replace motor driving amplifier (803).
C 4
YES
GOOD

C-16

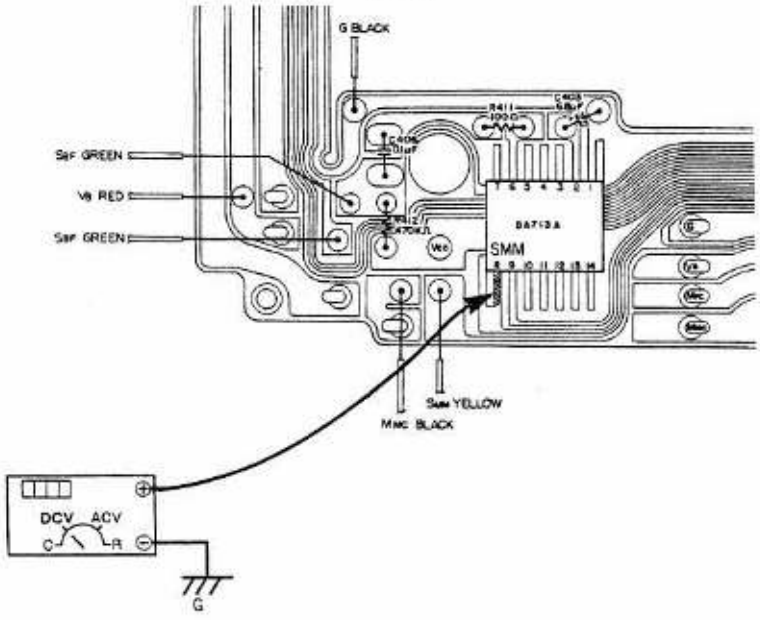

C 4 S_{MM}=About 6V

C	Power source	Lead wire	Measuring instrument	Range	Ascertainment
4	Required (6V)		Digital voltmeter	V	About 6V

4-4-13 **CAMERA STARTS OPERATING WITH 1ST-STEP DEPRESSION OF RELEASE BUTTON**

Is S2 short-circuited with ground?

YES → Terminals S2 and G are short-circuited at the place where the base plate terminal of AE amplifier (B-25) and shutter resistor (B-7). ····· Clean.

→ Terminals S2 and G are short-circuited in shutter resistor. (For this check, disconnect AE amplifier and shutter resistor) ····· Replace shutter resistor (08002).

C 1

NO ↓

Are S2 and S1 short-circuited or turned ON at the same time?

YES → Check and see if terminals S1 and S2 are short-circuited. ····· Replace shutter resistor (08002).

C 2

→ Check timing when S1 and S2 are turned ON. ····· Replace shutter resistor (08002).

C 3

NO ↓

GOOD

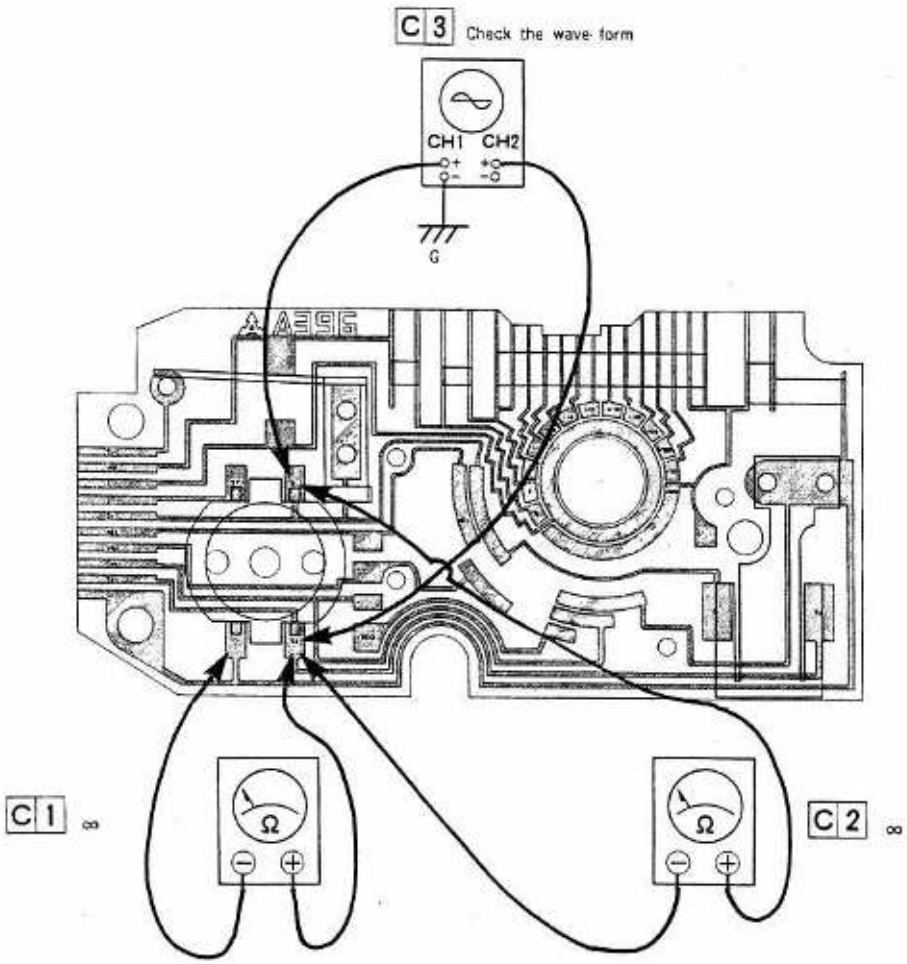

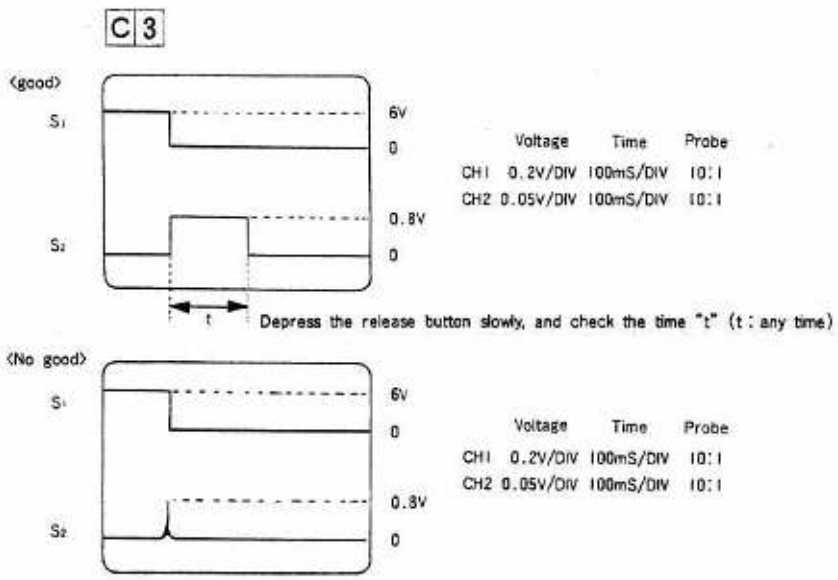

C	Power source	Lead wire	Measuring instrument	Range	Ascertainment
1	Not required	Detach	Tester	Ω	∞
2	Not required		Tester	Ω	∞
3	Required (6V)		Oscilloscope	CH1 0.2V/DIV, 100mS/DIV CH2 0.05V/DIV, 100mS/DIV	Check the wave form (Probe CH1…10 : 1, CH2…10 : 1)

4-4-14

M-LED DOES NOT FLICKER IN MANUAL MODE WITH 1ST-STOP DEPRESSION OF RELEASE BUTTON

Does auto-manual changeover switch properly move?

- NO → Operation of auto-manual changeover lever (D-11) is not proper. It does not return to original position by dint of righting moment of auto-manual changeover lever return spring (D-12). ..... Adjust or replace spring (05418).
- YES ↓

Does auto-manual changeover switch properly operate?

- NO → Auto-manual changeover switch contact plate (J-21) and auto-manual contact pin (K-49) are not turned ON in manual mode. ..... Adjust and clean switch.

  Specification:

  Contact resistance

  less than 0.1Ω

  C1

- NO → Auto-manual changeover switch lead wire (black, J-18) is not properly soldered and snapped. ..... Resolder or replace lead wire (08118).

  C2

- NO → Mirror box earth lead wire (black, L-60) is not properly soldered. ..... Resolder.
- YES ↓

Is flexible printed circuit board conductive?

- NO → There is no conduction between AM terminals on flexible printed circuit board (H-45). ..... Replace flexible printed circuit board subassembly (404).

  C3

- YES ↓

Is base plate terminal conductive?

- NO → Flexible print circuit plate (H-49) and AM terminal of AE amplifier (B-25) are not connected in connector conduction section. ..... Clean.

  C4

- YES ↓

Is there voltage from AE amplifier normal?

- NO → When S1 is turned ON, voltage at AM terminal of AE amplifier (B-25) is abnormal. ..... Replace AE amplifier (801).

  Specification:

  AE = 0.7 ~ 1V

  Manual = 0V

  C5

- YES ↓

GOOD

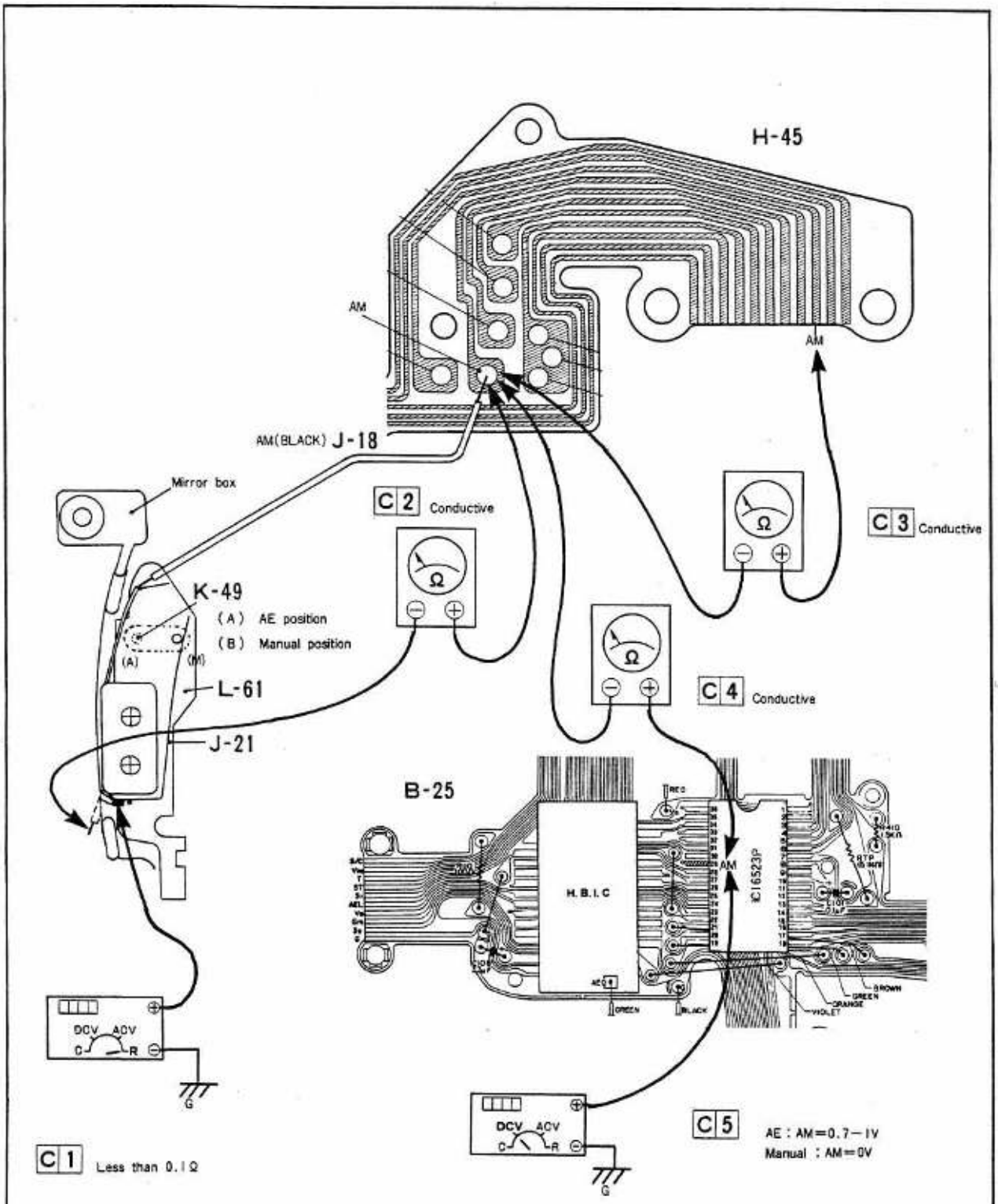

C	Power source	Lead wire	Measuring instrument	Range	Ascertainment
1	Not required	Detach	Digital voltmeter	Ω	Less than 0.1Ω
2	Not required	Detach	Tester	Ω	Conductive
3	Not required		Tester	Ω	Conductive
4	Not required		Tester	Ω	Conductive
5	Required (6V)		Digital voltmeter	V	AE 0.7−1V、 Manual 0V

4-4-15 **SELF-LED FLICKERS WITH 2ND-STEP DEPRESSION OF RELEASE BUTTON**

Is ST terminal conductive?

NO → ST terminal of AE amplifier (B-25) is not conductived with ST terminal of shutter resistor (B-7). ····· Clean.

C 1

NO → When release switch's S1 turned ON, ST terminal of shutter resistor does not conduct with ground. ····· Adjust or replace shutter resistor (08002).

C 2

YES → GOOD

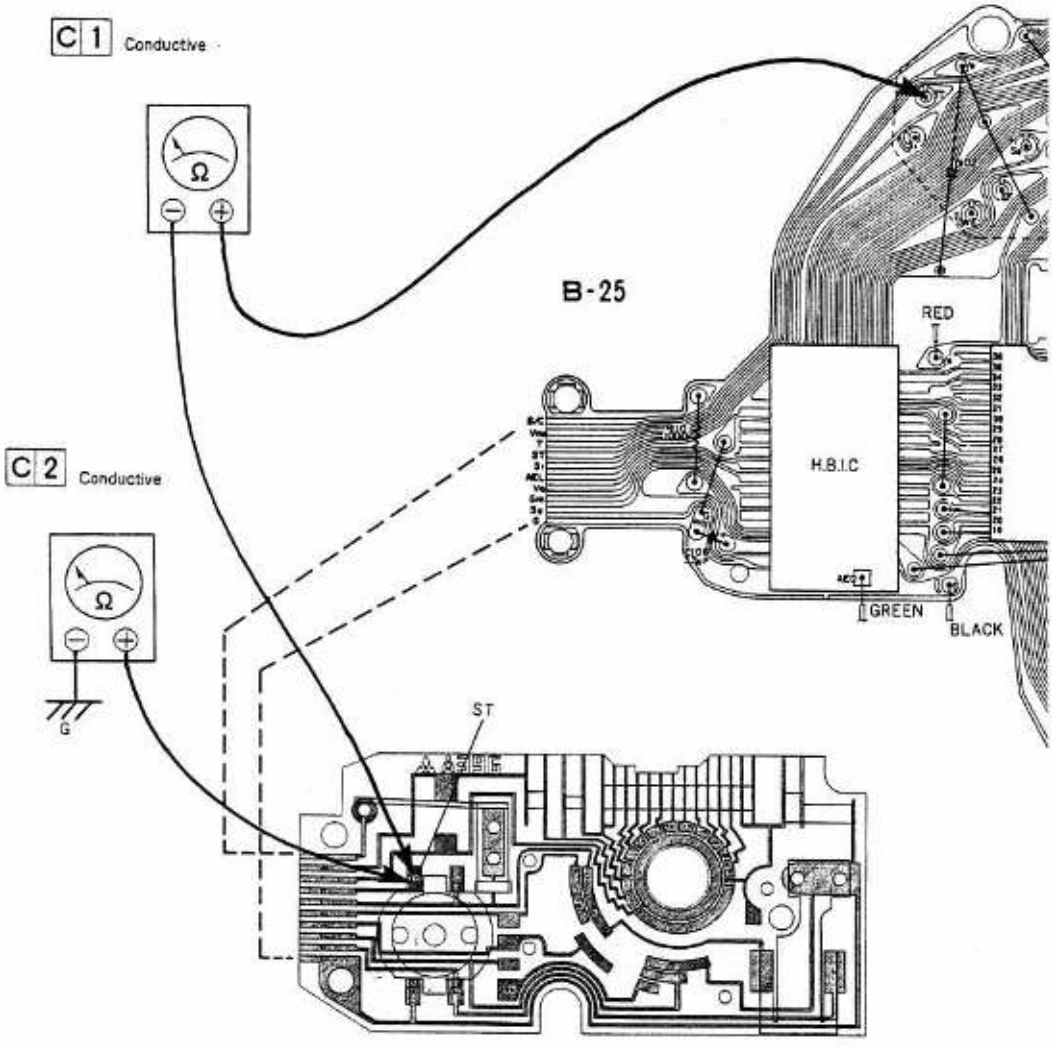

C	Power source	Lead wire	Measuring instrument	Range	Ascertainment
1	Not required		Tester	Ω	Conductive
2	Not required		Tester	Ω	Conductive

4-4-16 CAMERA OPERATES NATURALLY

Is film counter properly turned ON and OFF?

- NO → While remaining turned off film counter switch (H-17) is turned ON by vibration or shock. ..... Adjust.

  C1

- YES ↓

Is wind switch properly turned ON and OFF?

- NO → While remaining turned off, wind switch contact plate (F-51) is turned ON by vibration or shock. ..... Adjust.

  C2

- YES ↓

Is mirror box switch properly turned ON and OFF?

- NO → While remaining turned off, switch (SMM1) in diaphragm magnet (E-23) and mirror box switch contact plate A (L-36) are turned ON by vibration or shock. ..... Adjust.

  C3

- YES ↓

Is battery case contact plate firmly in contact with camera body's power source contact plate?

- NO → When shock is given with battery cells loaded, a change is brought about in voltage. ..... Adjust, clean or replace battery case (835).

  C4

- YES ↓

Is rear blade firmly set?

- NO → Shutter goes into action due to stain on rear blade of shutter (H-41). ..... Clean or replace shutter (402).
- YES ↓

C 4 Check the wave form

C 3 Check the wave form

C 1 Check the wave form

C 2 Check the wave form

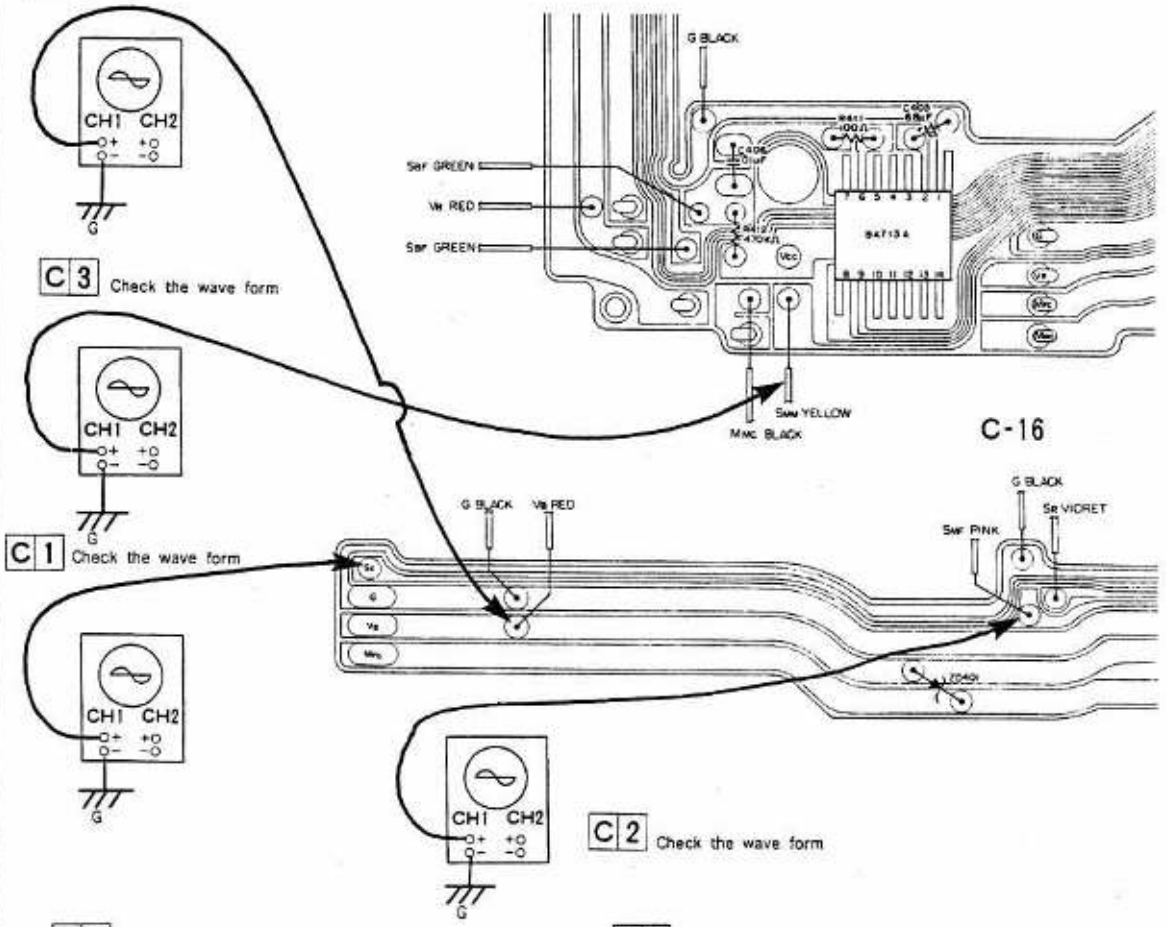

C 1

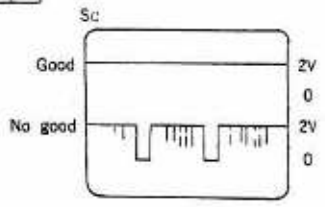

Voltage 1V/DIV Time 10mS/DIV Probe 1 : 1

C 3

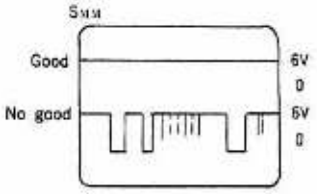

Voltage 2V/DIV Time 10mS/DIV Probe 1 : 1

C 2

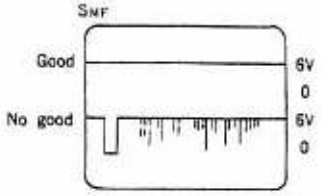

Voltage 2V/DIV Time 10mS/DIV Probe 1 : 1

C 4

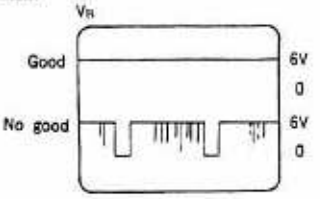

Voltage 2V/DIV Time 10mS/DIV Probe 1 : 1

C	Power source	Lead wire	Measuring instrument	Range	Ascertainment
1	Required (6V)		Oscilloscope	1V/DIV、10m/DIV	Check the wave form (Probe 1 : 1)
2	Required (6V)		Oscilloscope	2V/DIV、10mS/DIV	Check the wave form.(Probe 1 : 1)
3	Required (6V)		Oscilloscope	2V/DIV、10mS/DIV	Check the wave form (Probe 1 : 1)
4	Required (6V)		Oscilloscope	2V/DIV、10mS/DIV	Check the wave form (Probe 1 : 1)

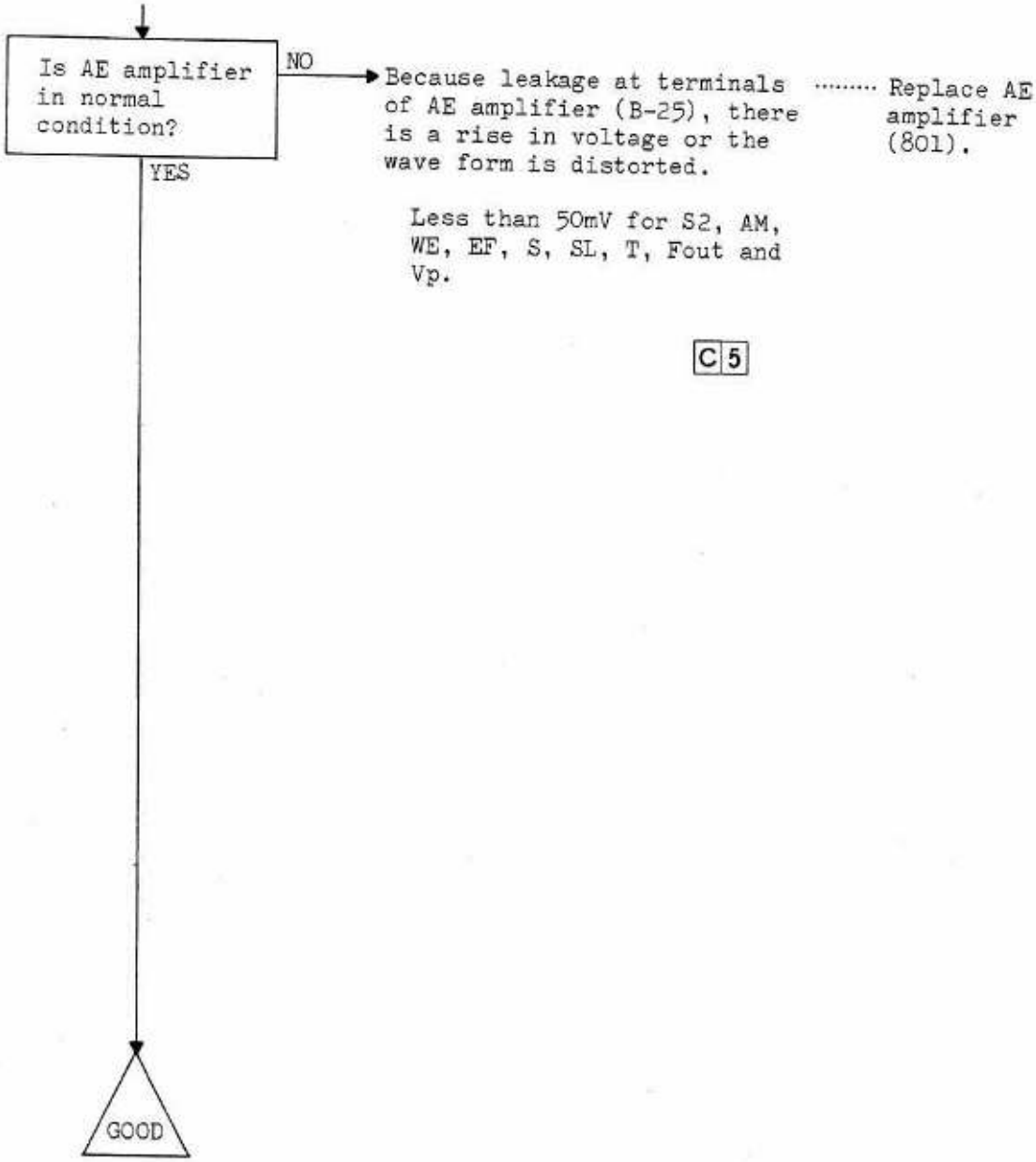
Is AE amplifier in normal condition?
NO
Because leakage at terminals of AE amplifier (B-25), there is a rise in voltage or the wave form is distorted.
Replace AE amplifier (801).
Less than 50mV for S2, AM, WE, EF, S, SL, T, Fout and Vp.
C 5
YES
GOOD

C 5 Less than 50mV

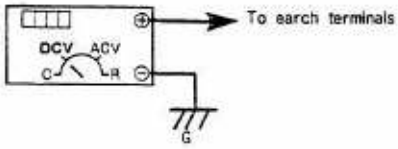

B-25

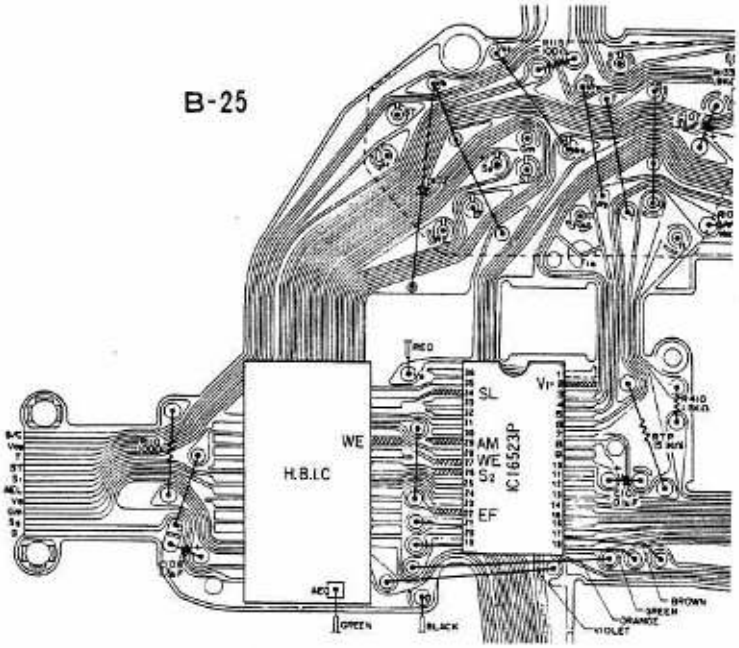

C 5

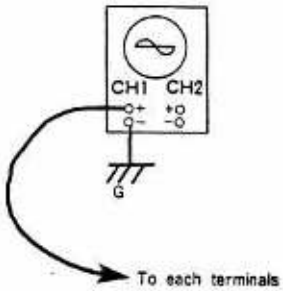

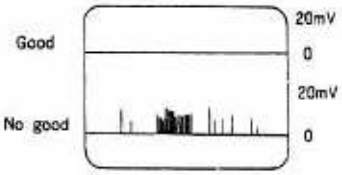

Voltage Time Probe
20mV/DIV、10mS/DIV、1 : 1

C	Power source	Lead wire	Measuring instrument	Range	Ascertainment
5	Required (6V)		Digital voltmeter	V	Less than 50mV (Each terminals)
	Required (6V)		Oscilloscope	20mV/DIV、10mS/DIV	Check the wave form Probe 1:1

4-4-17 AE DOES NOT LOCK

Is base plate terminal conductive?

- NO → AE amplifier (B-25) is not properly connected with flexible printed circuit board (H-45), as base plate terminal is dirty or improper for some reason. ····· Clean.
- YES ↓

Is AE amplifier correctly connected to shutter resistor?

- NO → Check soldering or AEQ lead wire (green). ····· Resolder.
- NO → Check and see if AEQ lead wire (gree) is snapped. ····· Replace lead wire.
- YES ↓

C 1

Is shutter resistor normal?

- NO → Check conduction between AEQ and G terminals of shutter resistor (B-7). ····· Replace shutter resistor (08002).

  ※ By AEL mode

C 2

- NO → Check conduction between AEL and S1 terminals of shutter resistor. ····· Replace shutter resistor (08002).

  ※ By AEL mode

- YES ↓

C 3

Is AE amplifier normal?

- NO → The voltage of AEL terminal of AE amplifier (B-25) is abnormal. ····· Replace AE amplifier [HBIC is defective] (801).

  Specification:

  AEL = Less than 0.3V

  ※ By AEL mode

C 4

- NO → Voltage of AEL terminal of AE amplifier is less than 0.3V and AE lock cannot be put into action. ····· Replace AE amplifier [IC16523P defective] (801).

  ※ By AEL mode

- YES ↓

GOOD

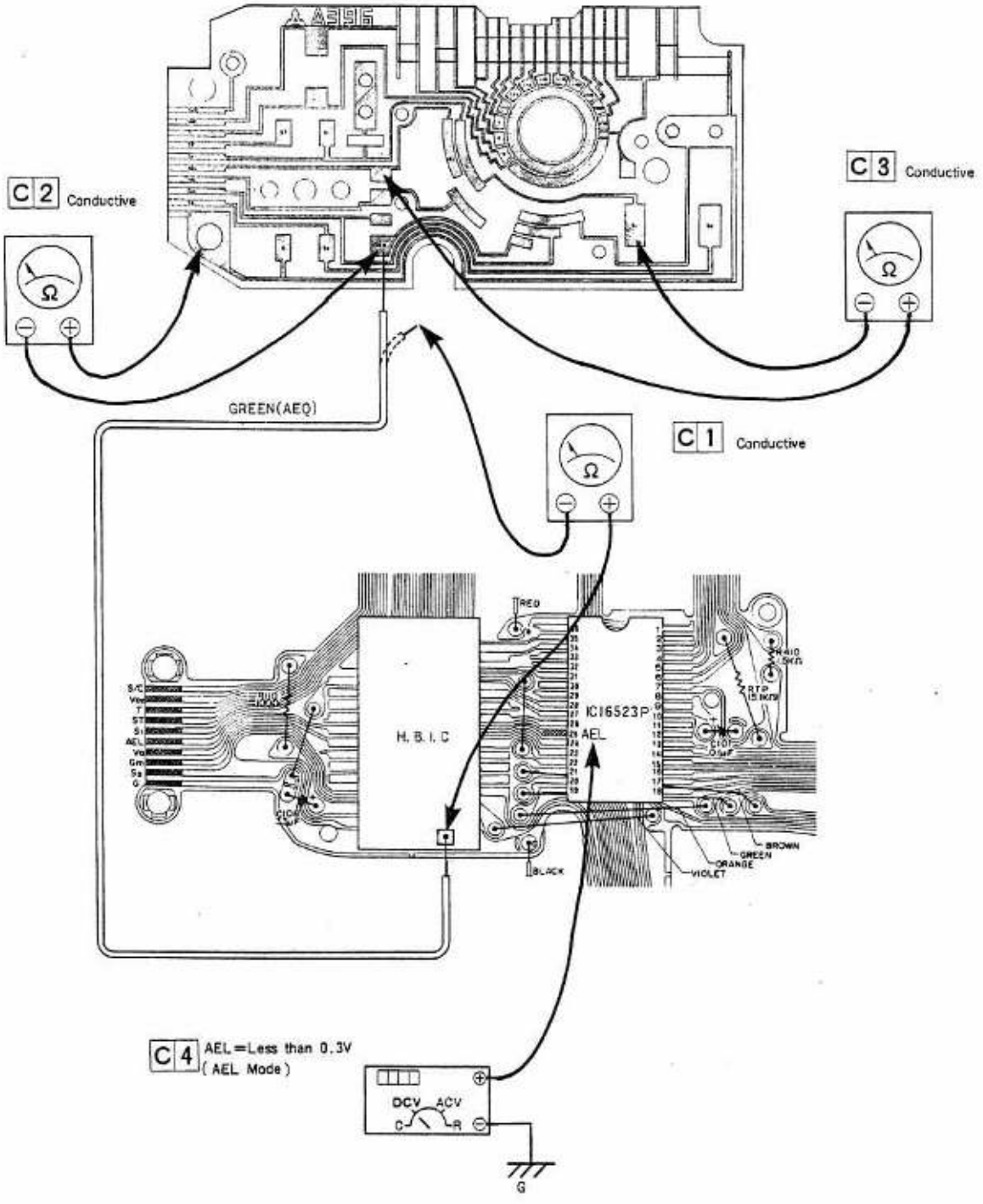

C	Power source	Lead wire	Measuring instrument	Range	Ascertainment
1	Not required	Detach	Tester	Ω	Conductive
2	Not required	Detach	Tester	Ω	Conductive
3	Not required	Detach	Tester	Ω	Conductive
4	Required (6V)		Digital voltmeter	V	AEL=Less than 0.3V (AEL Mode)

4-4-18 **MAIN SWITCH CANNOT BE TURNED ON**

Is base plate terminal conductive?

NO → AE amplifier (B-25) is not properly connected with flexible printed circuit board (H-45), as base plate terminal is dirty or improper for some reason. ····· Clean.

YES

Is shutter resistor normal?

NO → Check the conduction between VQ and S1 terminals of shutter resistor (B-7). ····· Replace shutter resistor (08002).

C 1

→ Check the conduction between G and S2 terminals of shutter resistor. ····· Replace shutter resistor (08002).

C 2

YES

GOOD

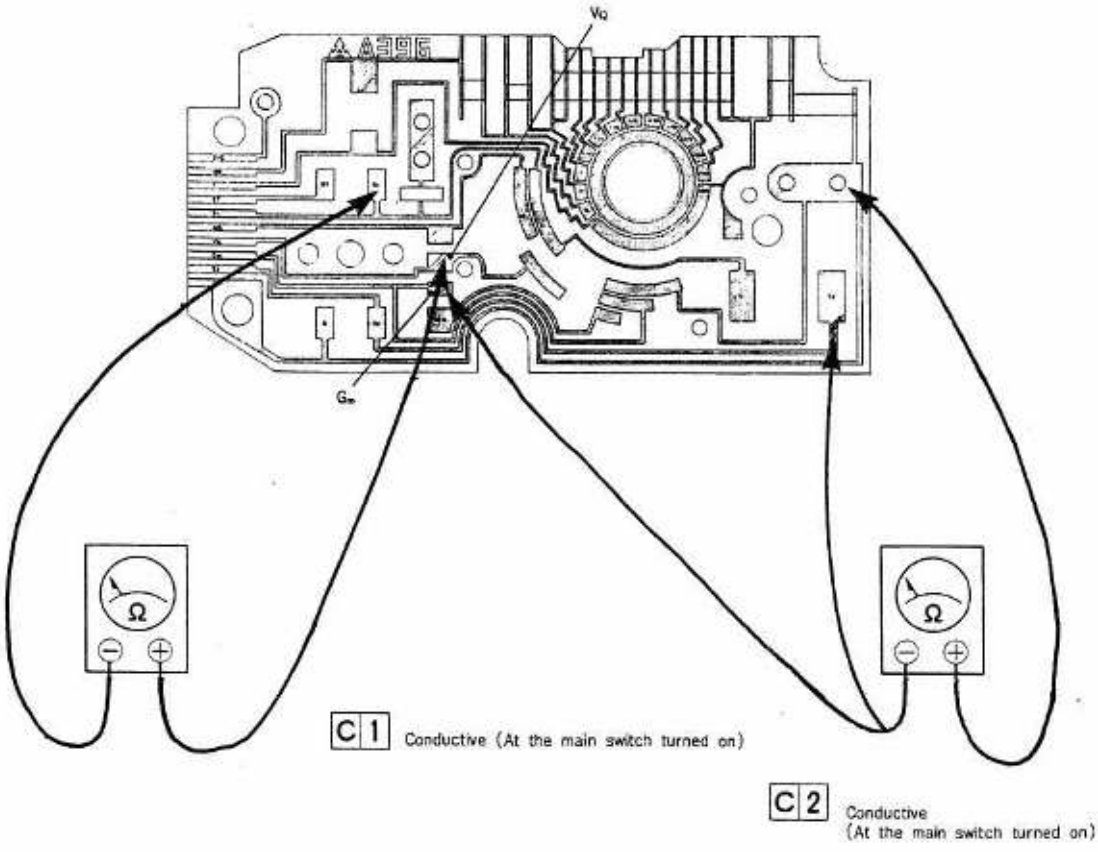

C	Power source	Lead wire	Measuring instrument	Range	Ascertainment
1	Not required		Tester	Ω	Conductive
2	Not required		Tester	Ω	Conductive

4-5 FINDER

4-5-1 FOCUSING DEFECTIVE AT ∞

Is flange-back distance accurate?

- NO → Measure distance with flange-back distance meter. ..... Adjust distance with mount washers (05432 ~ 05439).

  Specification: 40.66 ±0.02mm

- YES ↓

Is focusing of the finder accurate?

- NO → Measure focusing with collimeter. ..... Adjust focusing with focusing adjustable washers (05241 ~ 05256).

  Specification: 40.54 ±0.02mm

  C 1

- YES ↓

Is angle of the mirror vertically accurate?

- NO → Measure agnle with mirror angle checker. ..... Adjust angle with mirror angle adjusting screw.

  Specification: 45° ±20'

- YES ↓

Is angle of the mirror horizontally accurate?

- NO → Measure agnle with mirror angle checker. Check mirror stopper rubber (K-15) for its pasted condition and mirror frame supporting plate (K-16) for its mounted position. ..... Adjust.

- YES ↓

Is focusing of the lens accurate?

- NO → Check accuracy with collimeter with an object focused on film plane. ..... See "Lens Repair Manual."

- YES ↓

GOOD

C 1

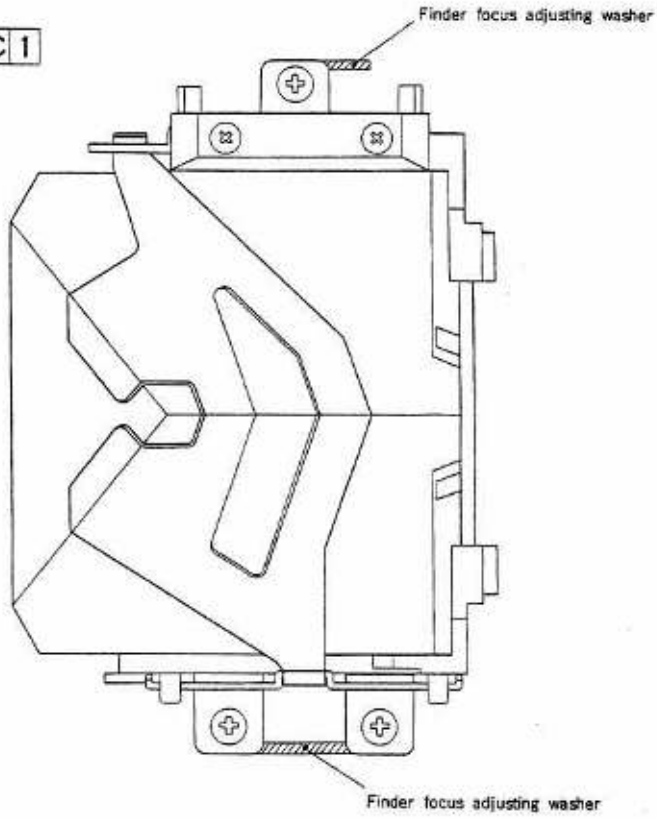

C	Power source	Lead wire	Measuring instrument	Range	Ascertainment
I	Not required		Collimator		Visually check

4-5-2 IMAGED TILTED, BLURRED ON ONE SIDE, OXIS SHITTED

Is vertical or horizontal line of a subject seen vertical or horizontal in the finder?

- NO → Pentaprism (J-51) is mounted at a slant. ····· Re-mount pentaprism.
- NO → Pentaprism frame (J-55) is mounted at a slant as its mounting assembly is deformed. ····· Adjust mounting assembly of pentaprism frame.
- NO → Mirror angle is not accurate. ····· Refer to "Focusing defective at ∞." (4-5-1)
- YES ↓

Does the focused point remain one and the same between situations where a subject is brought into focus at the center and those where it is focused around the finder frame?

- NO → (Pentaprism (J-51) is mounted at a slant. / Pentaprism frame (J-55) is mounted at a slant as its mounting assembly is deformed. / Mirror angle is not accurate.)
- YES ↓

Does the center of a subject as seen by the eye come in alignment with that of the subject as seen through the finder?

- NO → Not aligned because of a shift in relative position between pentaprism (J-51) and eyepiece lens (J-54). ····· Reset eyepiece lens.
- YES ↓

GOOD

4-6 COUNTER

4-6-1 FILM COUNTER UNRETURNABLE TO ORIGNAL POSITION

Does counter lever spring of the film counter return to original position when backlid is opened?

- NO → Action of counter lever spring (H-26) is hampered by light tight D (F-3). ····· Glue light tight D once again.
- NO → Gear transmitting spring (H-10) is worn out or out of position. ····· Adjust.
- YES ↓

Does counter drum move in a smooth manner?

- NO → Counter drum spring (H-7) is caught between counter drum (H-4) and film counter base plate (H-27). ····· Repair spring and put into position once again. Refer to "3-1-4 Key points for assembly adjustment."
- NO → Film counter plate recoiling spring is worn out or out of position. ····· Hook once again or replace film counter sub-assembly (231).
- NO → Counter drum, counter drum shaft (H-24) and counter drum set screw (H-3) are dirty. ····· Clean them.
- YES ↓

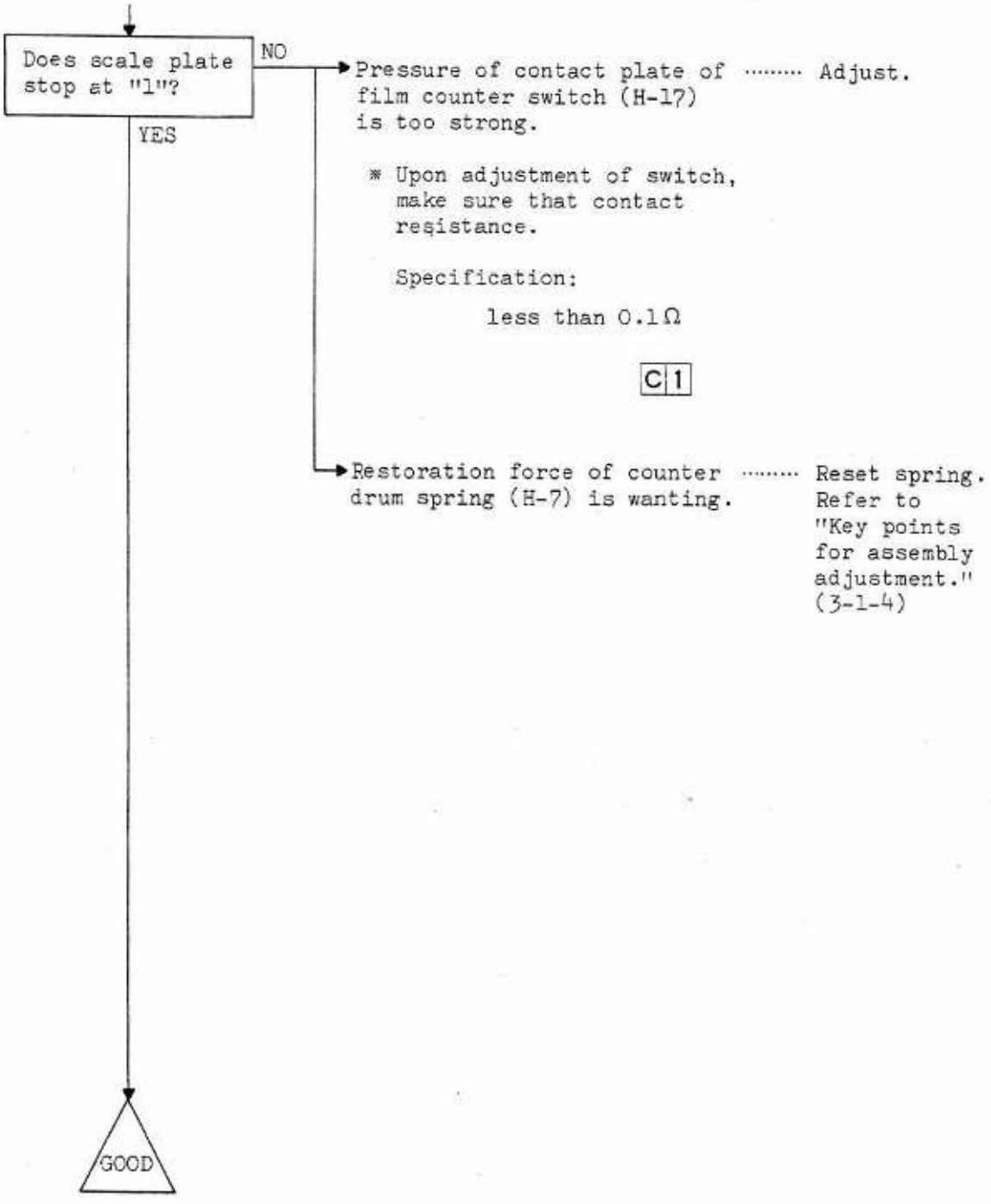
Does scale plate stop at "1"?
NO
YES
Pressure of contact plate of film counter switch (H-17) is too strong.
Adjust.
※ Upon adjustment of switch, make sure that contact resistance.
Specification:
less than 0.1Ω
C 1
Restoration force of counter drum spring (H-7) is wanting.
Reset spring. Refer to "Key points for assembly adjustment." (3-1-4)
GOOD

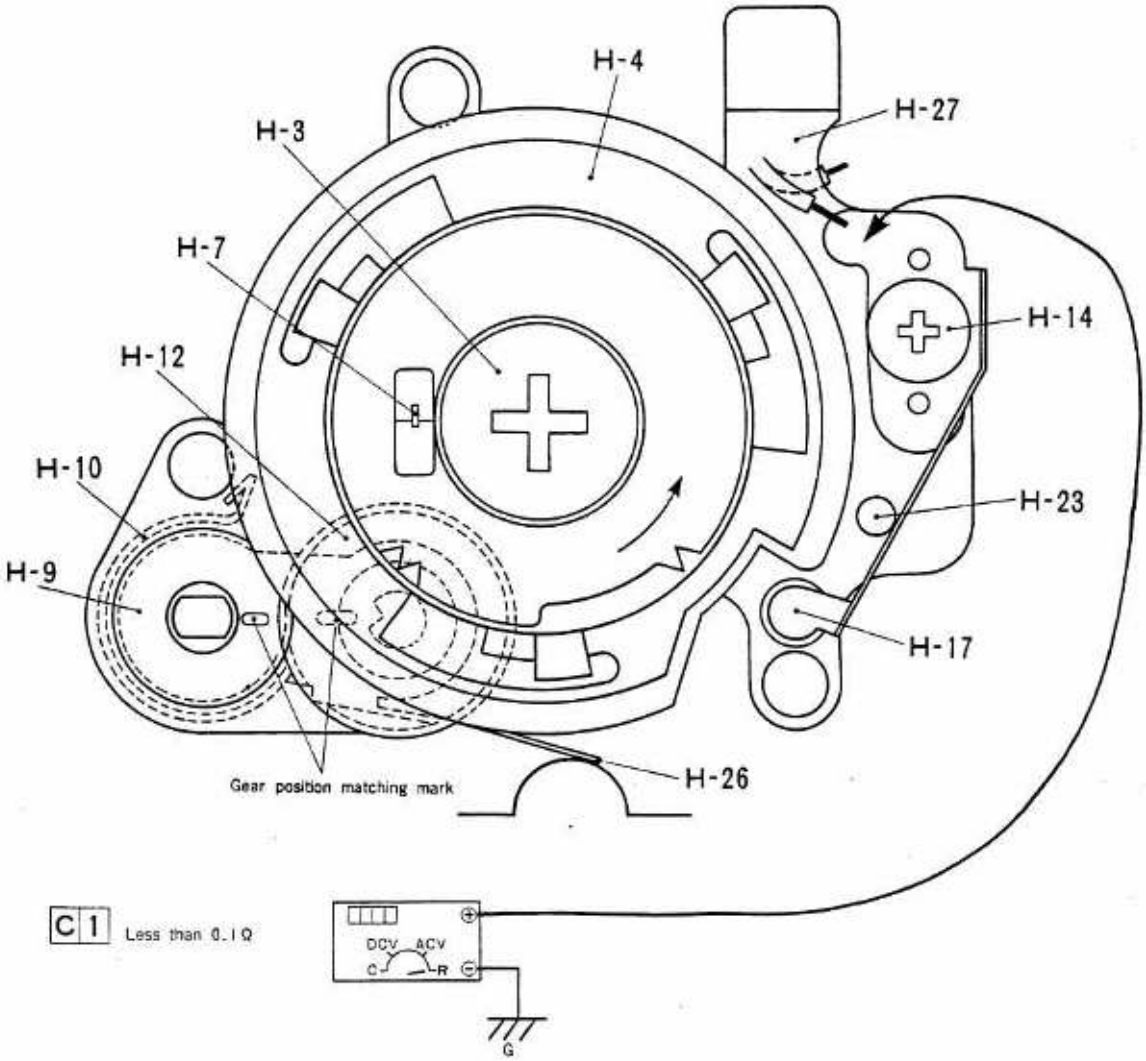

Assembling of counter unit

(1) Counter gear (H-9) and counter feed gear (H-12) must be assembled according to the gear positioning marks.
(2) To hook counter drum spring (H-7), hook it on counter drum (H-4) and counter baseplate (H-27) in advance. Keeping the counter drum in the initial state, raise the counter drum and turn it counterclockwise (in the direction of the arrow) two times, and assemble the counter drum.
(3) Whatever position counter drum (H-4) has returned from, counter switch contact plate (H-17) must be in contact with earth pin (H-23).
(4) Counter switch (H-17) must not be earthed by counter switch setscrew (H-14).
(5) The counter switch (Sc) must be turned ON and OFF in the following coundition.

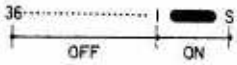

C	Power source	Lead wire	Measuring instrument	Range	Ascertainment
I	Not required	Detach	Digital voltmeter	Ω	Less than 0.1 Ω

4-6-2 FILM COUNTER DOES NOT ADVANCE

Is counter lever spring properly pressed by backlid?

- NO → Check by the eye and see if protrusion of backlid (M-38) has come out of counter level spring (H-26). ····· Adjust bending of protrusion.
- NO → Depression of counter level spring is inadequate. ····· Adjust.

C 1

- YES ↓

Does the sprocket rotate?

- NO → Cam gear (G-42) is breaked. ····· Replace wind gear base plate sub-assembly (209).
- YES ↓

Does the series of cogwheels in film counter rotate in a smooth manner?

- NO → Check and see if the series of cogwheels (H-4, H-9 and H-12) are in gear with one another and if there is any gear worn out in film counter. ····· Replace film counter sub-assembly (231).

C 1

- YES ↓

GOOD

C 1 Visually check

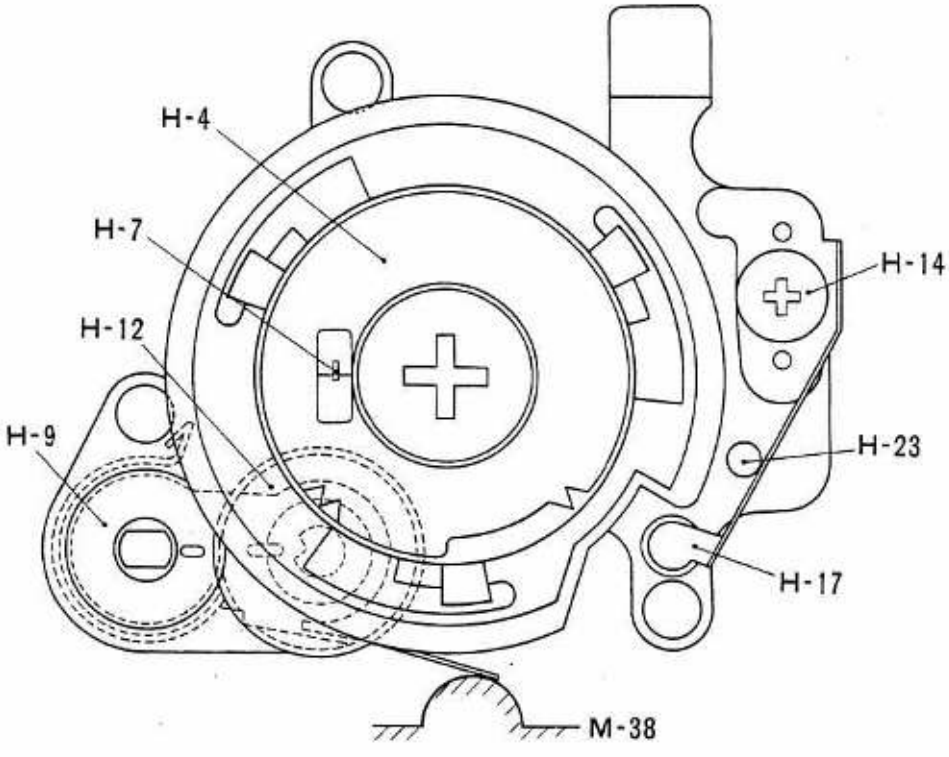

C	Power source	Lead wire	Measuring instrument	Range	Ascertainment
I	Not required				Visually check

4-7 SELF-TIMER

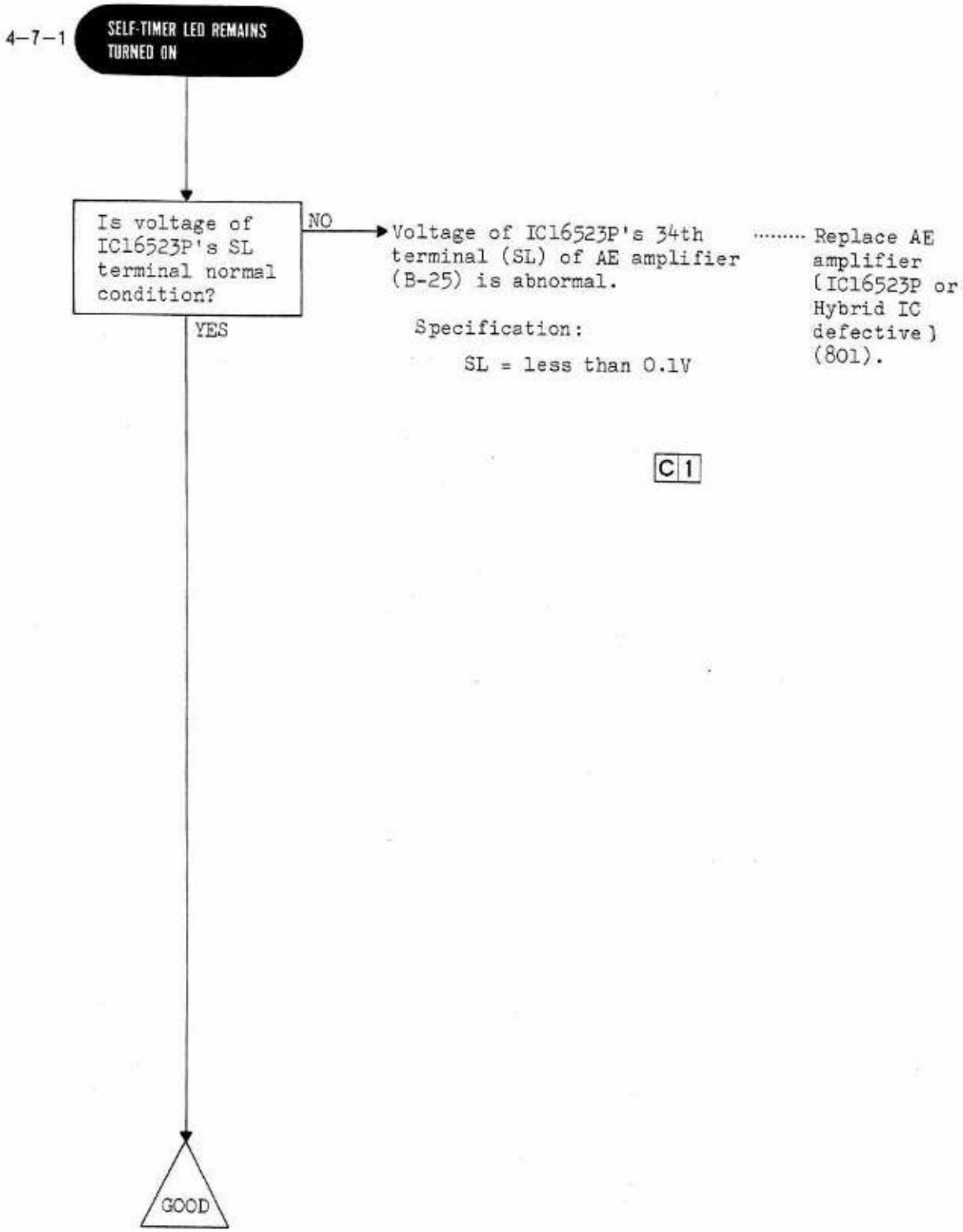

B-25

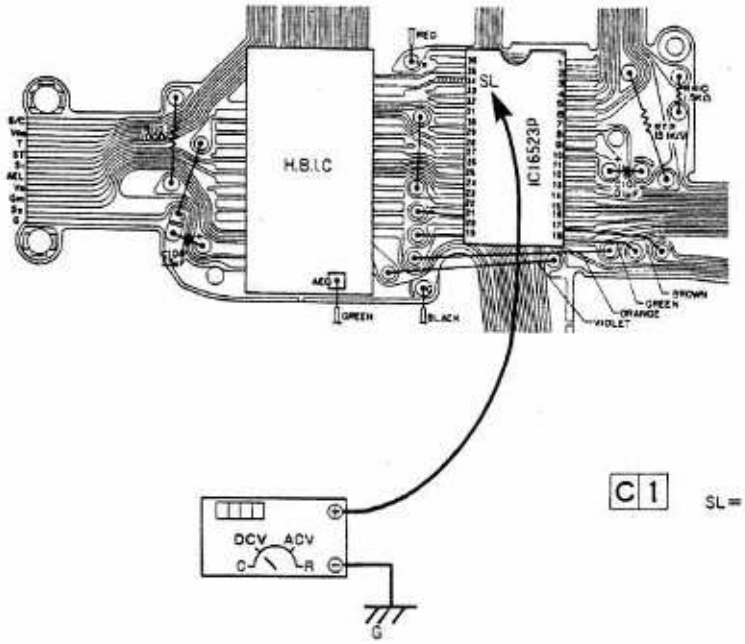

C 1 SL= Less than 0.1 V

C	Power source	Lead wire	Measuring instrument	Range	Ascertainment
1	Required (6V)		Digital voltmeter	V	SL=Less than0.1V

4-7-2

CAMERA IS PUT INTO OPERATION, INSTEAD OF BEING SET TO SELF-TIMER MODE, EVEN WHEN SELF-TIMER BUTTON HAS BEEN DEPRESSED

Is shutter resistor properly connected with AE amplifier?

- NO → Base plate terminal of shutter resistor (B-7) and AE amplifier (B-25) are dirty. ..... Clean.
- YES ↓

Is release switch's ST normal?

- NO → Value of resistance between shutter resistor's ST and G terminals is abnormal. ..... Replace shutter resistor (08002).

  Specification:

  $ST \sim G = \infty\ \Omega$

  C 1
- YES ↓

Is camera set to B mode?

- YES → T voltage of AE amplifier (B-25) is more than 2.4V. ..... Refer to "Shutter speed is defective." (4-3-3)

  C 2
- NO ↓

GOOD

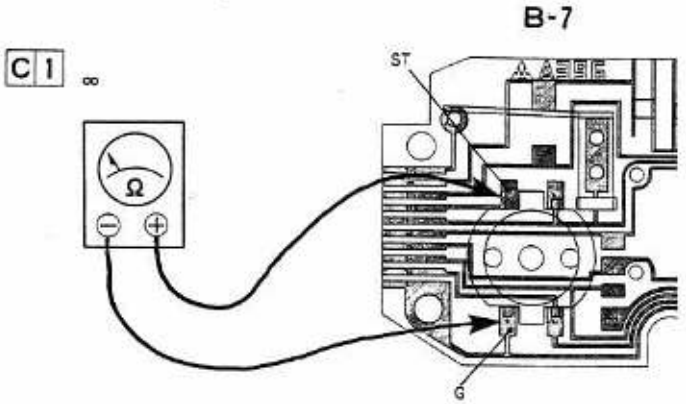

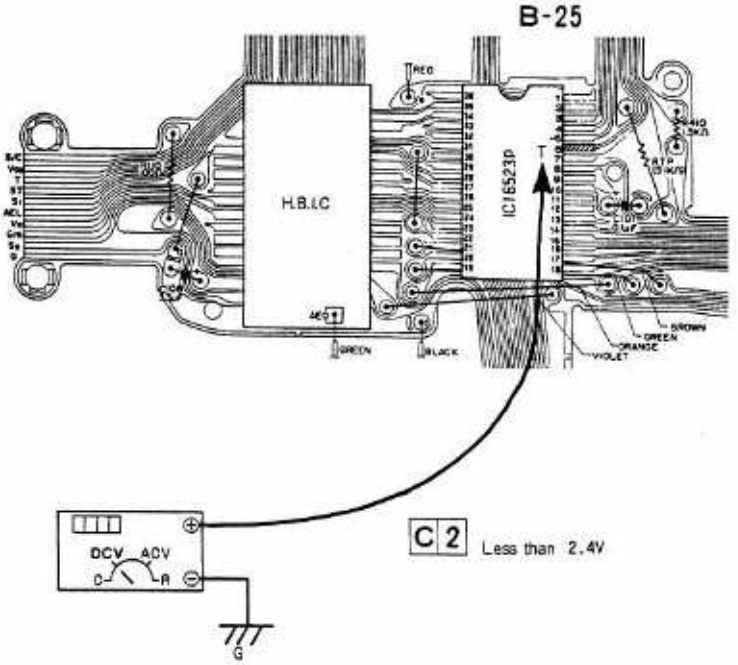

C	Power source	Lead wire	Measuring instrument	Range	Ascertainment
1	Not required	Detach	Tester	Ω	∞
2	Required (6V)		Digital voltmeter	V	Less than 2.4V

4-7-3 **CAMERA OPERATE WITHOUT SELF-TIMER LED TURNED ON AFTER ABOUT 10 SECONDS**

Does self-timer LED turned ON by itself?

NO → Self-timer LED does not turned ON when VB terminal of AE amplifier (B-25) is connected with (-) terminal of tester, and AE amplifier's SLED terminal with tester's (+) terminal. ..... Replace AE amplifier (801).

C 1

Note: Set of tester resistance X1, after make sure without fail that voltage is about 3V between (+) and (-) terminals of tester before it is put into use.

YES → GOOD

C 1 Self LED turned on

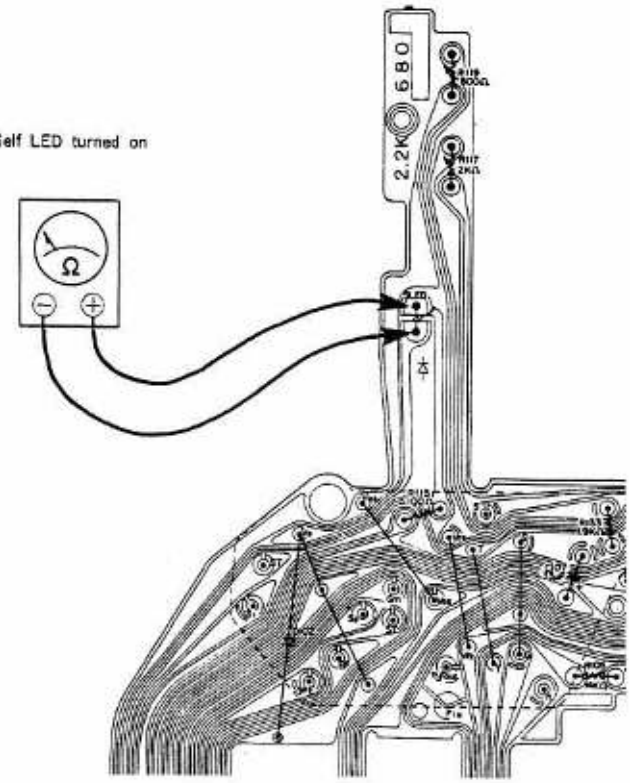

B-25

Note) check method of voltage between ⊕ terminal and ⊖ terminal of tester

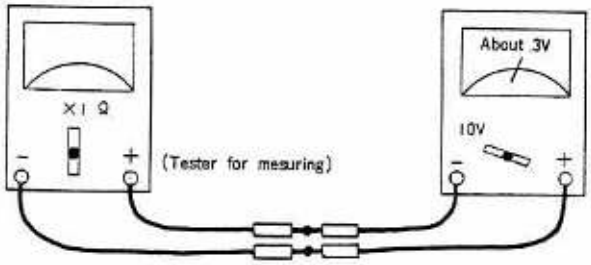

C	Power source	Lead wire	Measuring instrument	Range	Ascertainment
1	Not required			Ω(×1)	Self LED turned on

4-7-4 SELF-TIMER LED DOES NOT TURNED ON, NOR IS SHUTTER RELEASED

Is electric flow in shutter resistor normal and is shutter resistor properly connected with AE amplifier?

- NO → Shutter resistor (B-7) is not properly connected with AE amplifier (B-25). ····· Clean.
- NO → Shutter resistor's S1 and S2 terminal are not connected. ····· Replace shutter resistor (08002).

C 1

- YES ↓

Are signals from AE amplifier normal?

- NO → Check and see if SL and SLED terminals of Hybrid IC on the AE amplifier are lifted out of position. Check wave form of SL and SLED after S1 and S2 have been turned ON. ····· Resolder or replace AE amplifier (801).

C 2

- YES ↓

GOOD

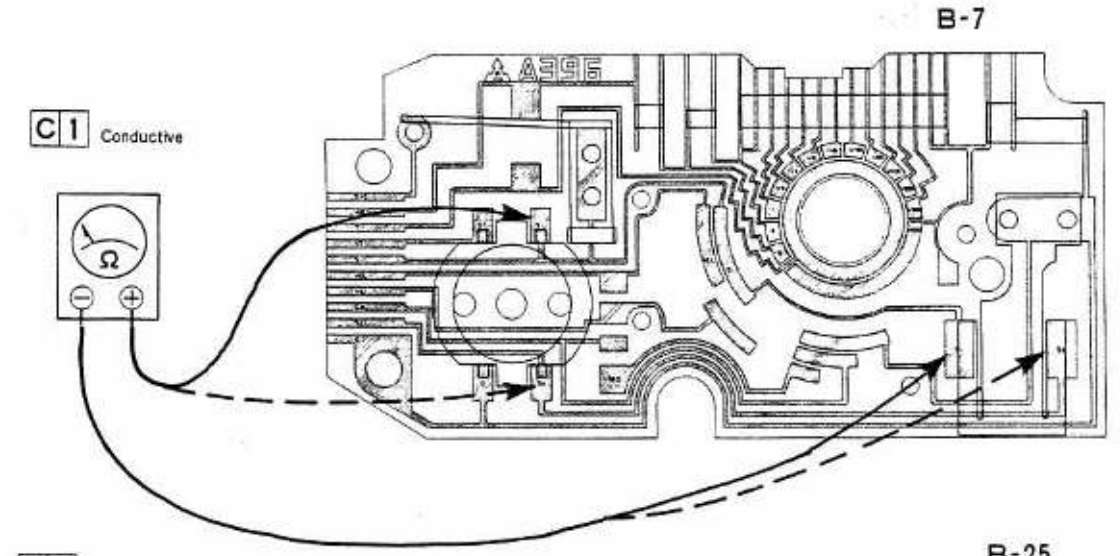

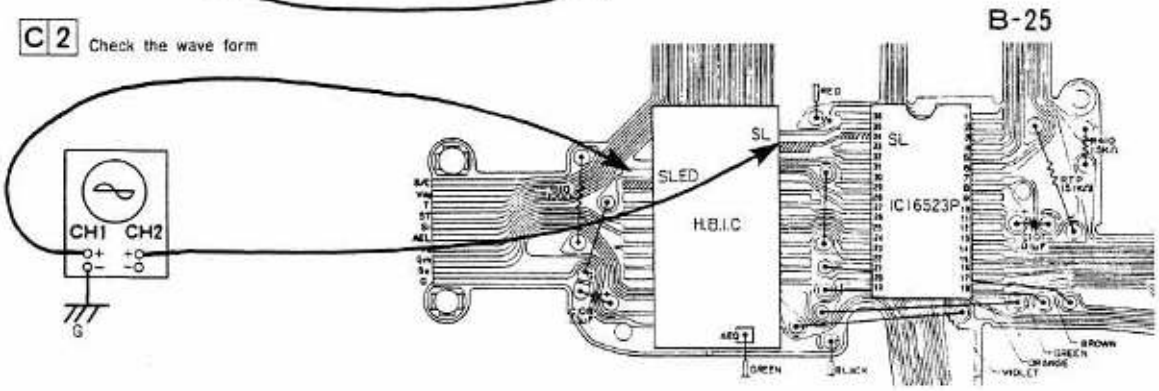

	Voltage	Time	Probe
CH1	0.2V/DIV	1sec/DIV	1:1
CH2	0.2V/DIV	1sec/DIV	10:1

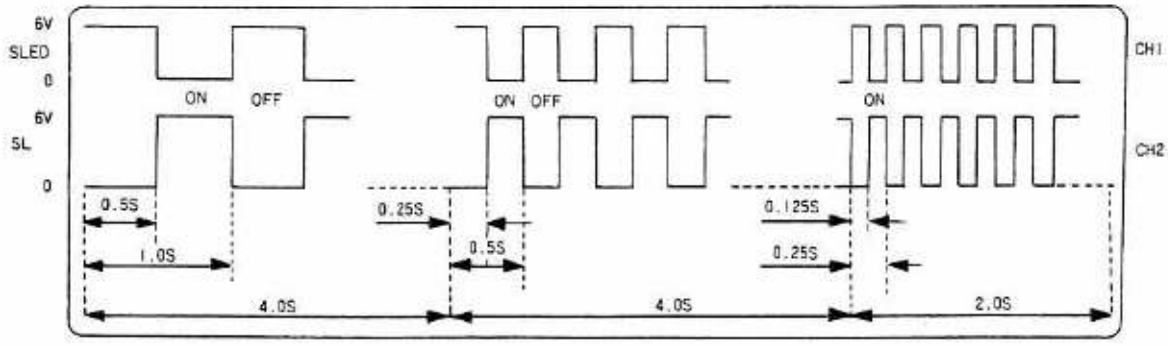

C	Power source	Lead wire	Measuring instrument	Range	Ascertainment
1	Not required	Detach	Tester	Ω	Conductive
2	Required (6V)		Oscilloscope	CH1 0.2V/DIV, 1sec/DIV CH2 0.2V/DIV, 1sec/DIV	Check the wave form (Probe CH1··· 1:1, CH2··· 10:1)

4-7-5 **SL TURNED ON AFTER SHUTTER DOSE NOT RUNNING**

Does shutter properly operate?

NO → Refer to "Camera does not operate with 2nd-step depression of release button." (4-4-11)

YES

Is AE amplifier is normal condition?

NO → In the self-timer mode, no signals are emitted from IC16523P of the AE amplifier (B-25). α , β , δ → Replace the AE amplifier (IC16523P is defective). (801)

C 1

YES

GOOD

C 1 Check the wave form

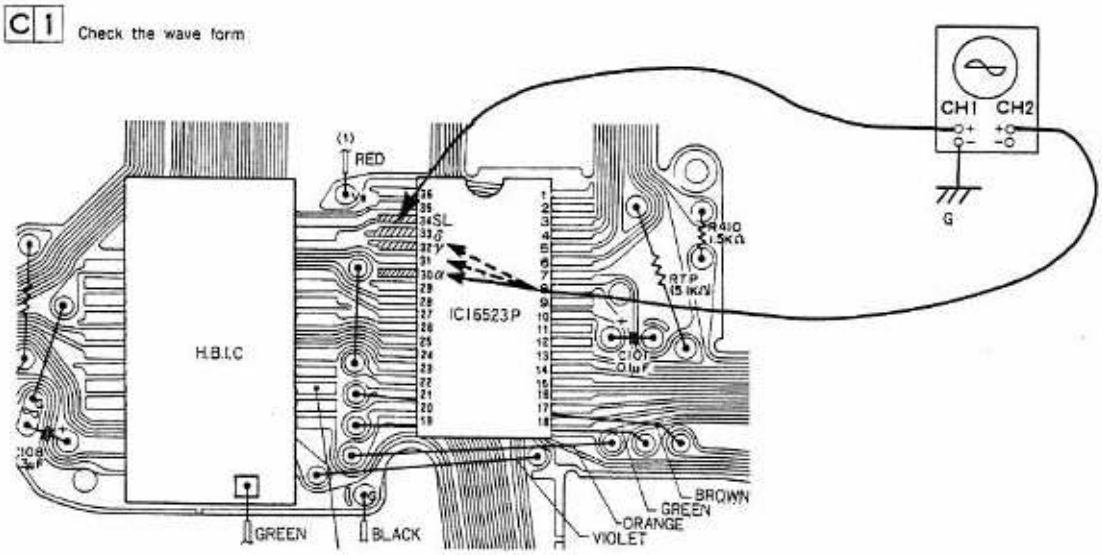

B-25

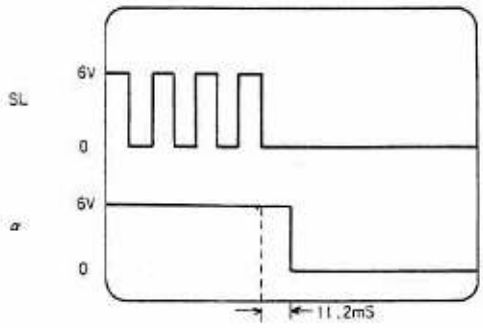

	Voltage	Time	Probe
CH1	0.2V/DIV	0.5S/DIV	10:1
CH2	0.2V/DIV	0.5S/DIV	10:1

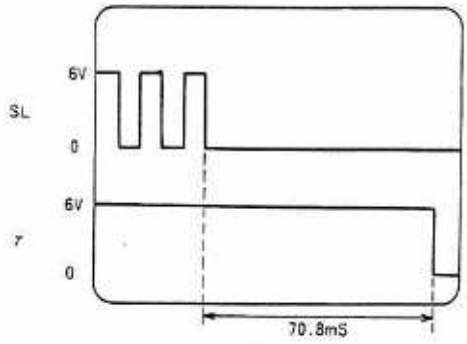

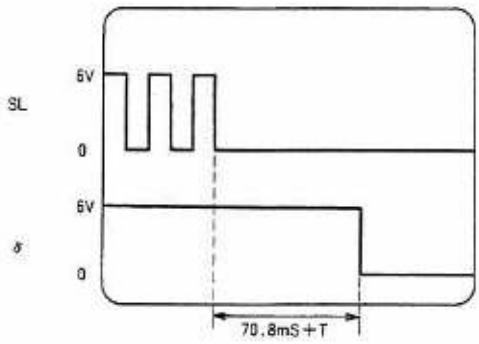

T=Shutter speed

C	Power source	Lead wire	Measuring instrument	Range	Ascertainment
1	Required (6V)		Oscilloscope	CH1 0.2V/DIV、0.5S/DIV CH2 0.2V/DIV、0.5S/DIV	Check the wave form (Probe CH1…10:1 CH2…10:1)

4-8 SYNCHRO CIRCUIT

4-8-1 DEFECTIVE ELECTRIC FLOW OF SYNCHRO TERMINAL CIRCUIT

Is synchro circuit's electric flow normal at B exposure?

NO

- There is no coduction between synchro socket core (F-36) and top cover F.P.C. (I-26). C1 ····· Resolder or replace synchro socket, top cover F.P.C. (111, 05158).
- Check wiring and conduction between shutter (B-48) and ASA-resister (B-30). C2 ····· Resolder.
- There is no conduction or dirty between ASA resister (B-30) and top cover F.P.C. (I-26). C3 ····· Clean or adjust.
- Check conduction between synchro earth plate (I-24) and top cover F.P.C. (I-26). C4 ····· Resolder.
- Surface of shutter's X contact dirty. ····· Clean.
- Shutter's X contact lever spring is deformed. ····· Adjust.
- Delay time of X contact must be less than 1ms from the moment lead blade has been fully opened. ····· Adjust.

YES

GOOD

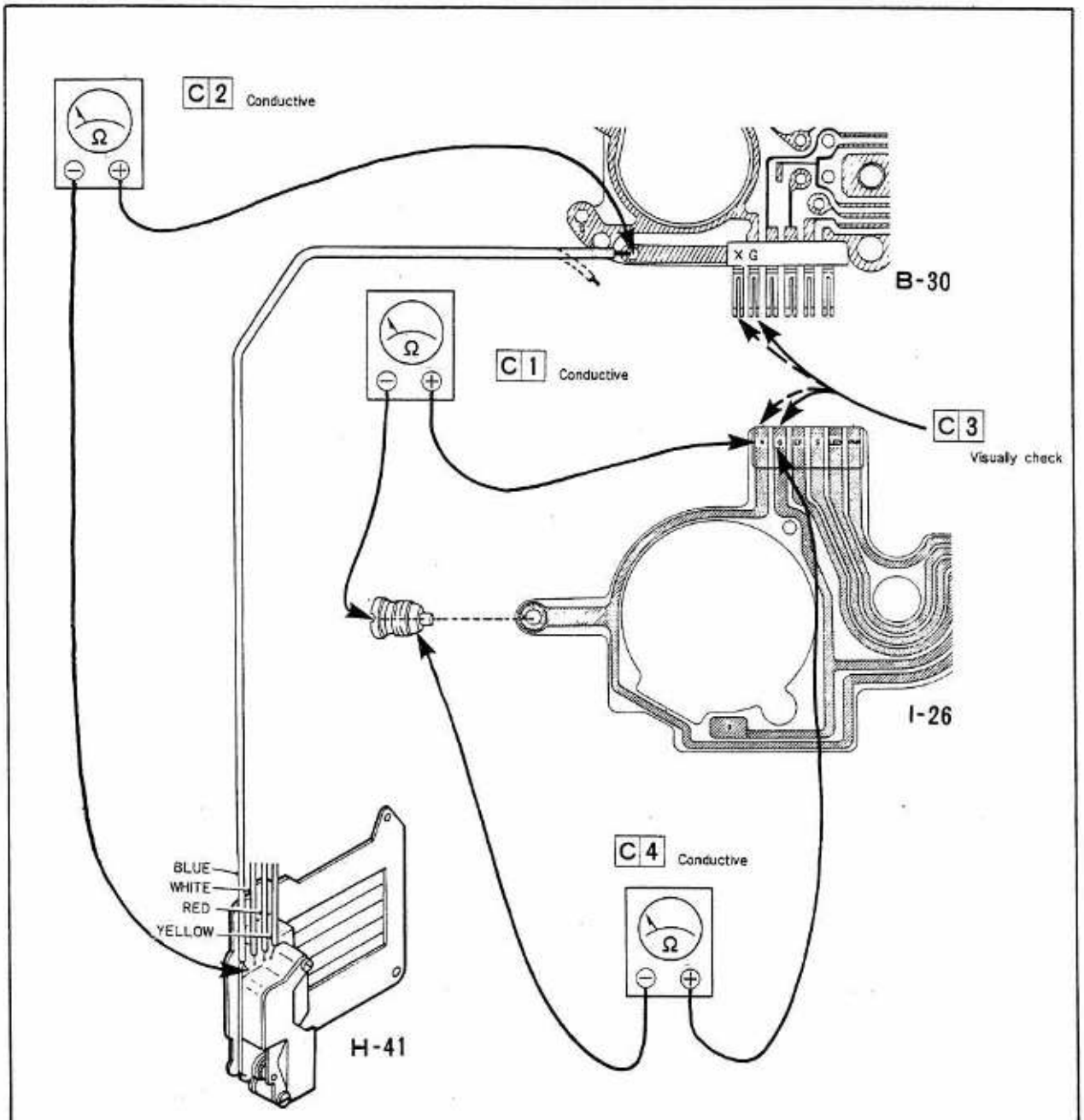

C	Power source	Lead wire	Measuring instrument	Range	Ascertainment
1	Not required		Tester	Ω	Conductive
2	Not required		Tester	Ω	Conductive
3	Not required				Visually check
4	Not required		Tester	Ω	Conductive

4-8-2 NONCONDUCT ELECTRIC FLOW OF HOT SHOE CIRCUIT

(Synchro terminal is normal.)

Does hot shoe switch operate normally?

- NO → The moving contact plate (I-43) and fixative contact plate (I-41) cannot be turned ON and OFF by vertical motion of switching pin (I-9). ····· Adjust.

  Switching pin ON → Conduct

  Switching pin OFF → ∞ Ω

  C 1

- YES ↓

Is top cover F.P.C. in contact with hot shoe fixative plate?

- NO → There is nonconduct electric flow between ground terminal of top cover F.P.C. (I-26) and hot shoe plate (I-7). ····· Resolder.
- YES ↓

Is ASA resistor connected with G of top cover F.P.C.?

- NO → ASA resistor (B-30) is not conductive to G of top cover F.P.C. (I-26). ····· Clean or adjust.
- YES ↓

GOOD

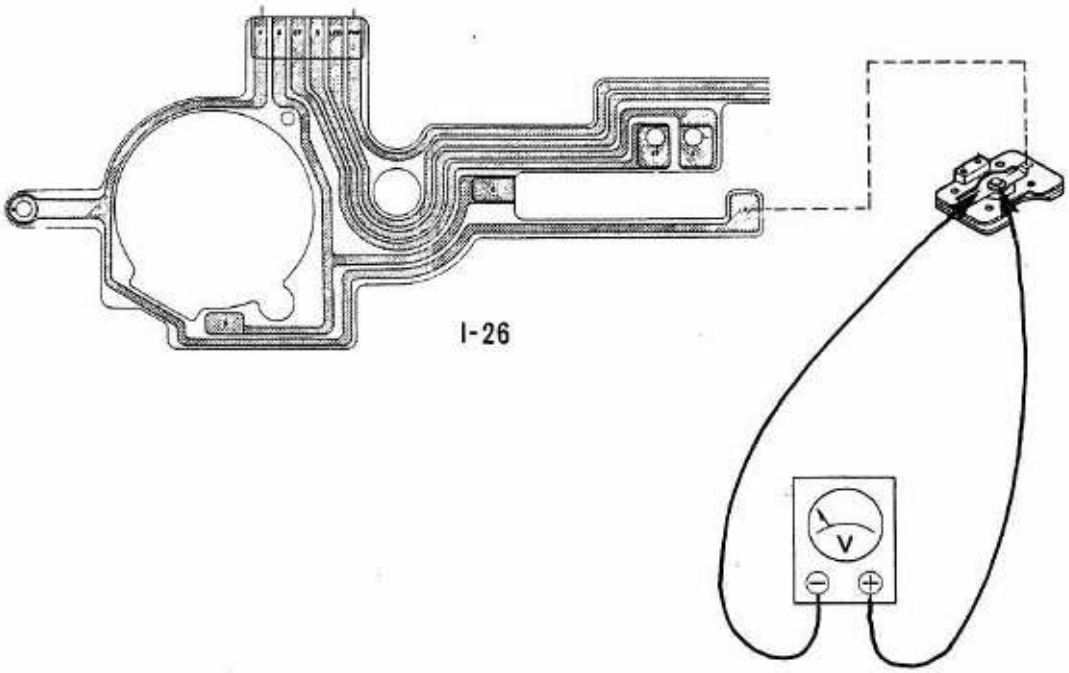

C 1 Switching pin ON···Conductive
Switching pin OFF···∞ Ω

C	Power source	Lead wire	Measuring instrument	Range	Ascertainment
1	Not required		Tester	Ω	Switching pin ON···Conductive Switching pin OFF···∞ Ω

4-8-3 **APERTURE AND SHUTTER SPEED ARE UNSTABLE WITH DEDICATED ELECTRONIC FLASH UNIT MOUNTED OR CAMERA CANNOT BE SET TO EF MODE IN AE PHOTOGRAPHY**

Factor: Dedicated electronic flash unit is normal.

Is hot shoe contact plate dirty?

- YES → The hot shoe contact plate is dirty and electricity does not flow to electronic flash unit's contact plate. ····· Clean.
- NO ↓

Is T and ASA resistor connected with AE amplifier?

- NO → Check conduction between T-resister (B-7), ASA-resistor (B-30) and AE amplifier (B-25). (G, S1, T, EF, S, V02) ····· Clean.

  C 1

- → Check the S terminal or EF terminal's conduction between ASA resister (B-30) and top cover F.P.C. (I-26). ····· Clean, adjust or replace ASA resistor (08013).

  C 2

- YES ↓

Is top cover F.P.C. properly connected with hot shoe contact plate by lead wires to assure conduction?

- NO → Check conduction electric flow among S and EF terminals of top cover F.P.C. (I-26), hot shoe's S terminal, and electronic flash contact rivet (I-45). ····· Resolder.

  C 3

- YES ↓

Is AE amplifier's IC normal?

- NO → Voltage is abnormal at IC16523P's EF terminal and IC16505's S terminal. ····· Replace AE amplifier (801).

  Specification:

  EF = 2 ~ 3V

  S = 1.2V ±10mV (ASA 100)

  C 4

- YES ↓

GOOD

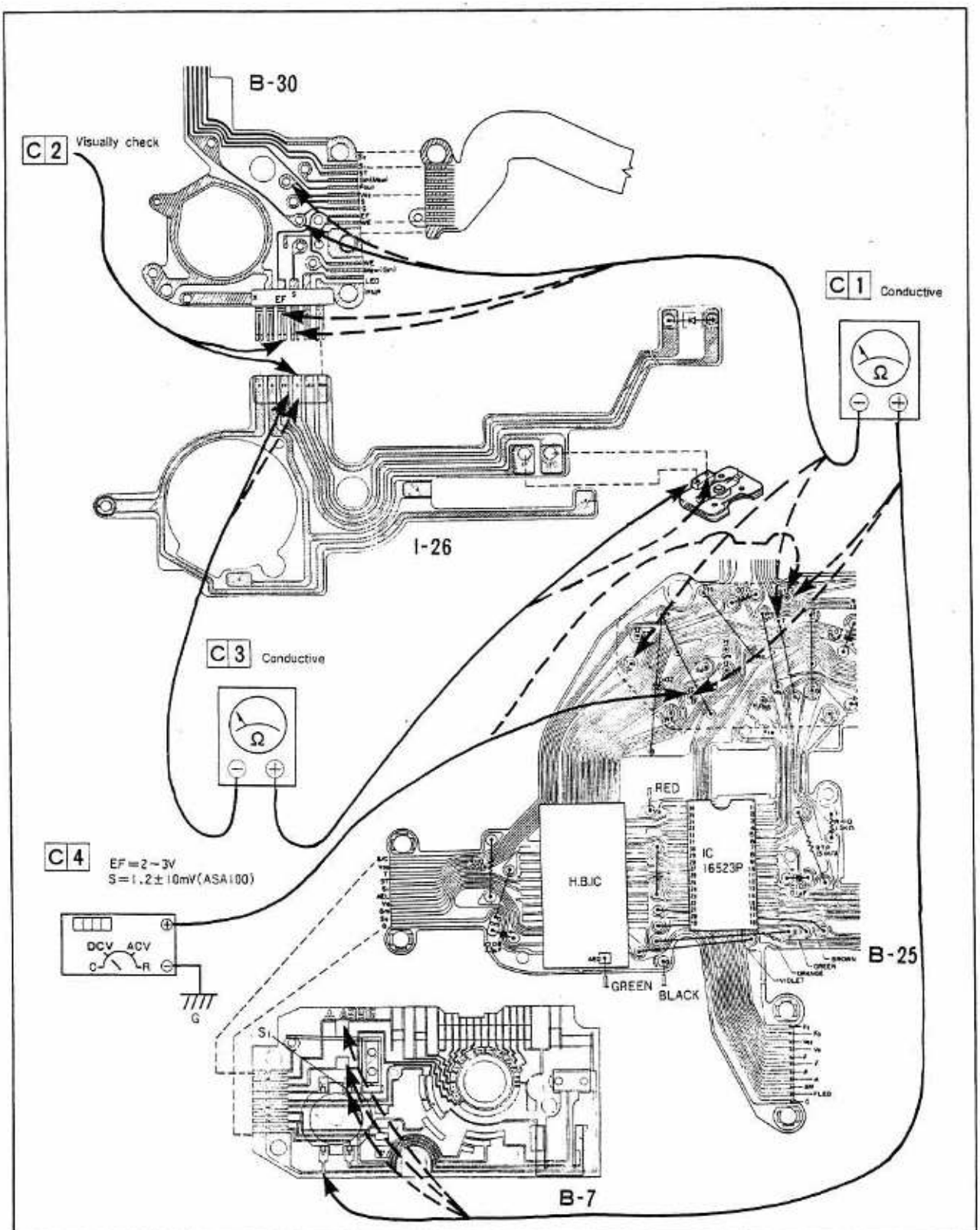

C	Power source	Lead wire	Measuring instrument	Range	Ascertainment
1	Not required		Tester	Ω	Conductive
2	Not required				Visually check
3	Not required		Tester	Ω	Conductive
4	Required (6V)		Digital voltmeter	V	EF=2−3V, S=1.2±10mV (ASA100)

4-9 REWIND

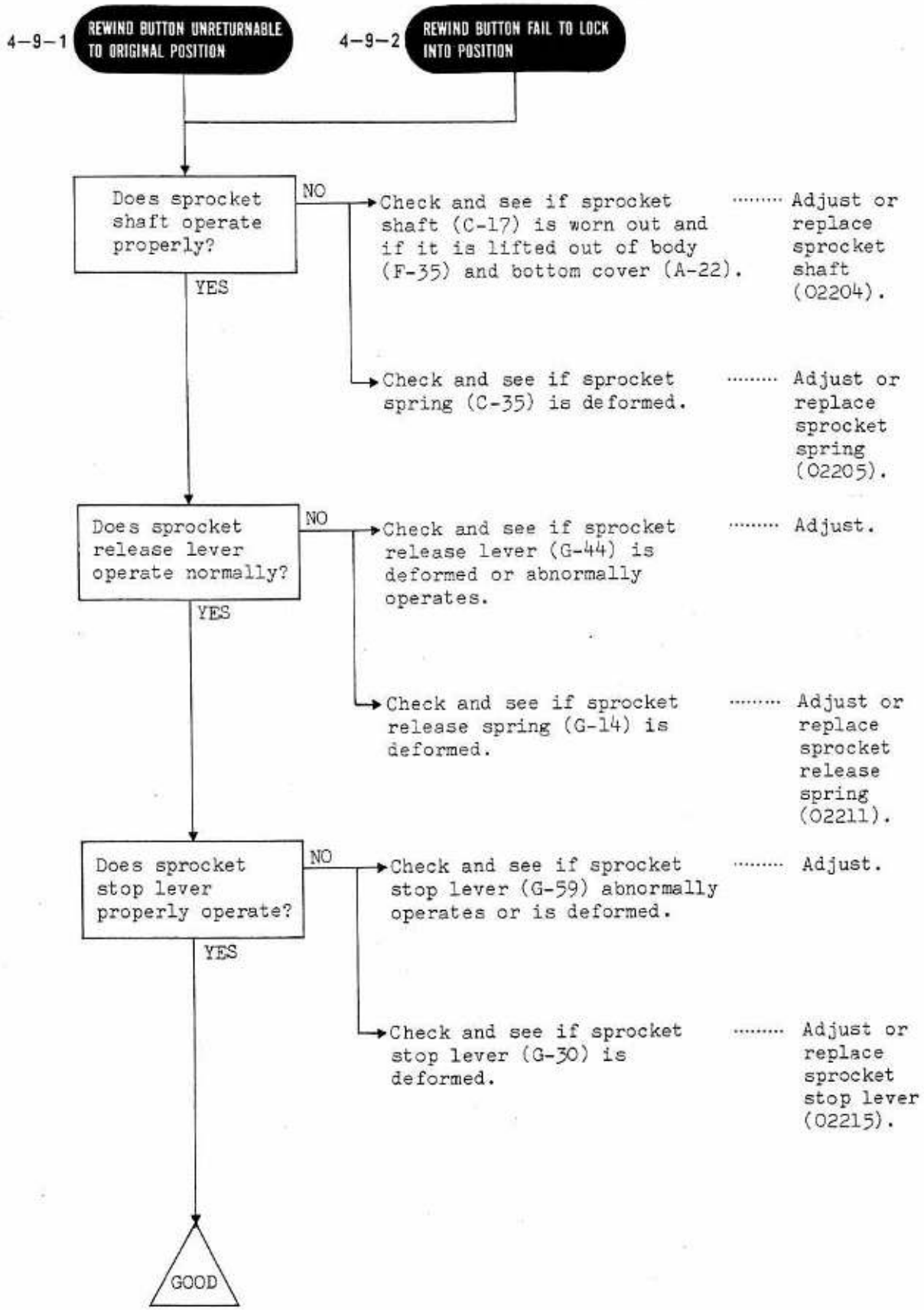
4-9-1 REWIND BUTTON UNRETURNABLE TO ORIGINAL POSITION
4-9-2 REWIND BUTTON FAIL TO LOCK INTO POSITION
Does sprocket shaft operate properly?
NO
Check and see if sprocket shaft (C-17) is worn out and if it is lifted out of body (F-35) and bottom cover (A-22).
Adjust or replace sprocket shaft (02204).
Check and see if sprocket spring (C-35) is deformed.
Adjust or replace sprocket spring (02205).
YES
Does sprocket release lever operate normally?
NO
Check and see if sprocket release lever (G-44) is deformed or abnormally operates.
Adjust.
Check and see if sprocket release spring (G-14) is deformed.
Adjust or replace sprocket release spring (02211).
YES
Does sprocket stop lever properly operate?
NO
Check and see if sprocket stop lever (G-59) abnormally operates or is deformed.
Adjust.
Check and see if sprocket stop lever (G-30) is deformed.
Adjust or replace sprocket stop lever (02215).
YES
GOOD

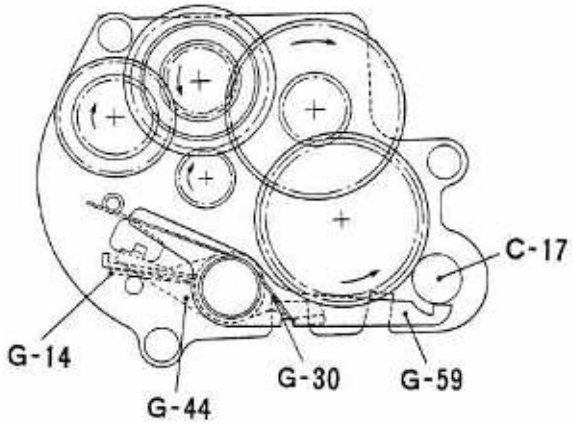
C-17
G-14
G-44
G-30
G-59

4-9-3 SLUGGISH REWIND ACTION

Does rewind spindle smoothly rotate?

- NO → Check rotated between rewind spindle (A-9) and ASA resistor's spindle bearing (B-30). ····· Clean and adjust. Or replace rewind spindle (02410).
- NO → Check and see if rewind spindle washer (A-11) is deformed. ····· Adjust or replace friction spring washer (02412).
- YES ↓

Is spool friction normal?

- NO → Check and see if spool friction spring (G-8) and spool gear (G-9) are worn out. ····· Adjust or replace spool friction spring sub-assembly (207).

  Specification:

  Spool friction

  150 ~ 250g

- YES ↓

GOOD

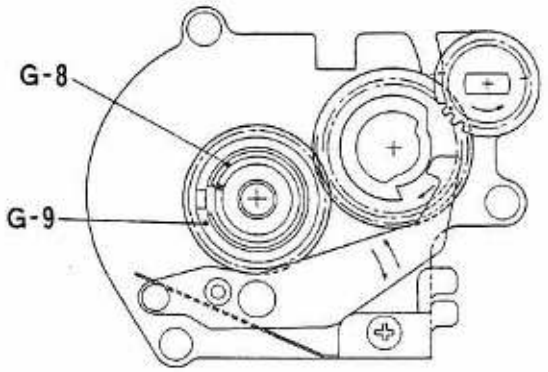
G-8
G-9

4-10 BACKLID

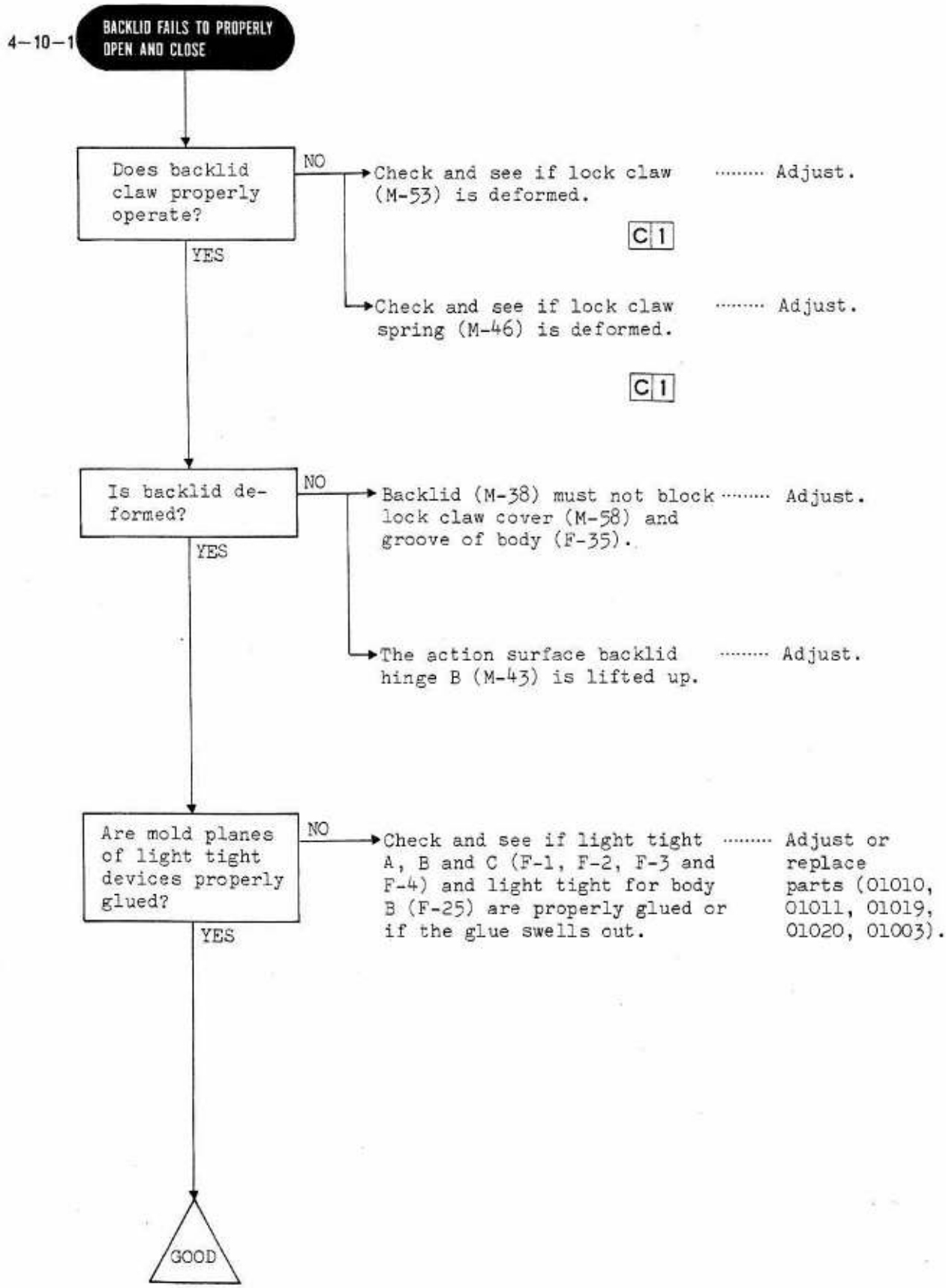
4-10-1
BACKLID FAILS TO PROPERLY OPEN AND CLOSE
Does backlid claw properly operate?
NO
Check and see if lock claw (M-53) is deformed.
..... Adjust.
C 1
YES
Check and see if lock claw spring (M-46) is deformed.
..... Adjust.
C 1
Is backlid deformed?
NO
Backlid (M-38) must not block lock claw cover (M-58) and groove of body (F-35).
..... Adjust.
YES
The action surface backlid hinge B (M-43) is lifted up.
..... Adjust.
Are mold planes of light tight devices properly glued?
NO
Check and see if light tight A, B and C (F-1, F-2, F-3 and F-4) and light tight for body B (F-25) are properly glued or if the glue swells out.
..... Adjust or replace parts (01010, 01011, 01019, 01020, 01003).
YES
GOOD

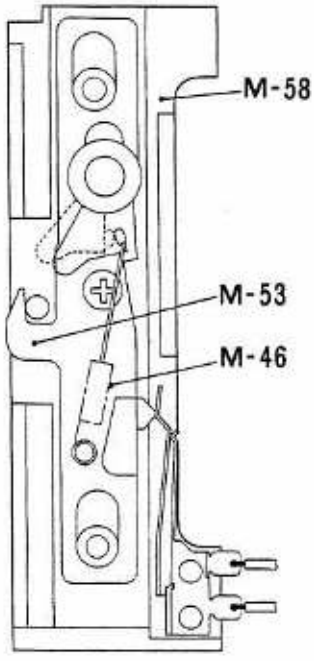

C 1 Visually check

C	Power source	Lead wire	Measuring instrument	Range	Ascertainment
1	Not required				Visually check

4-11 BATTERY CASE

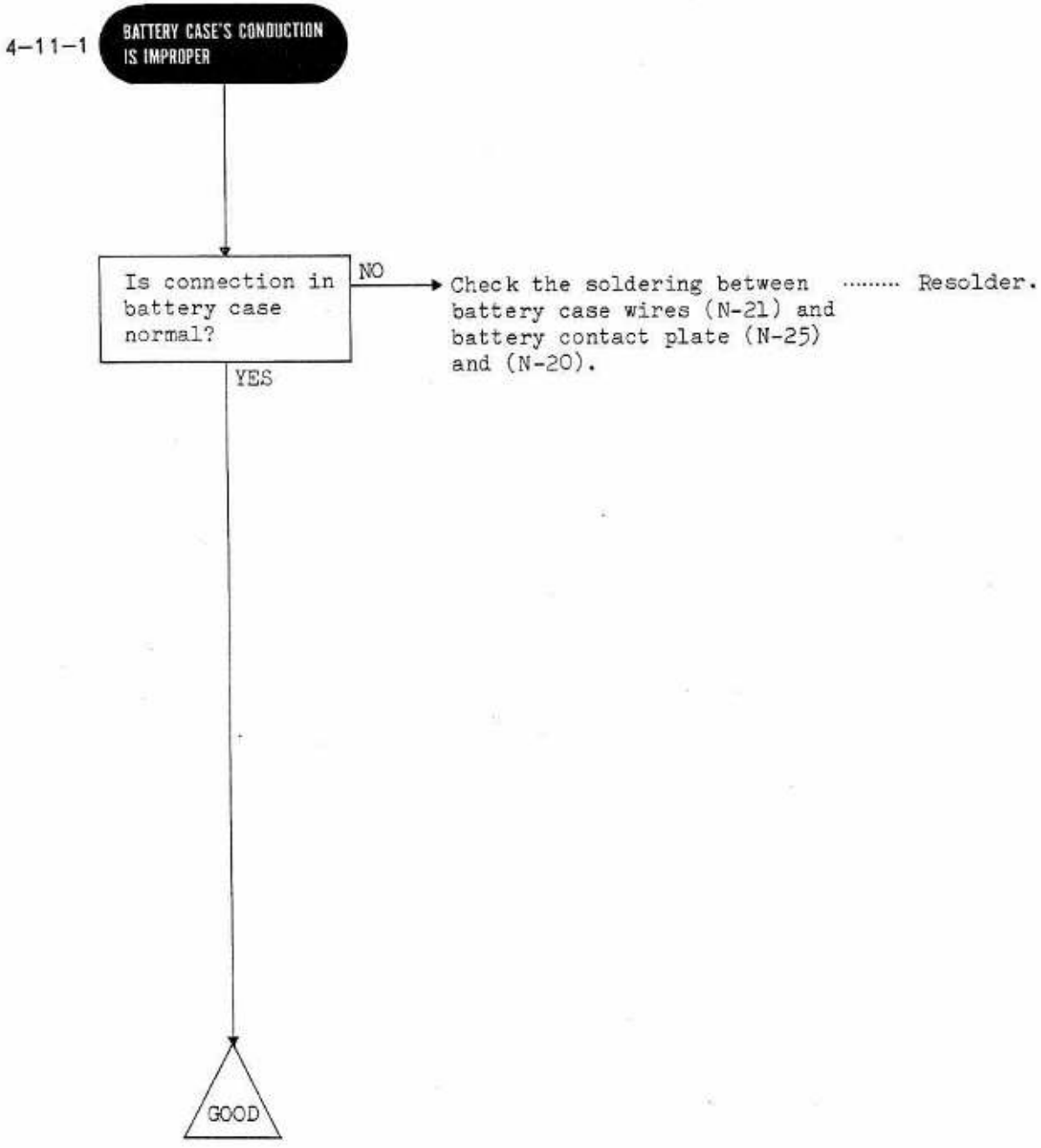

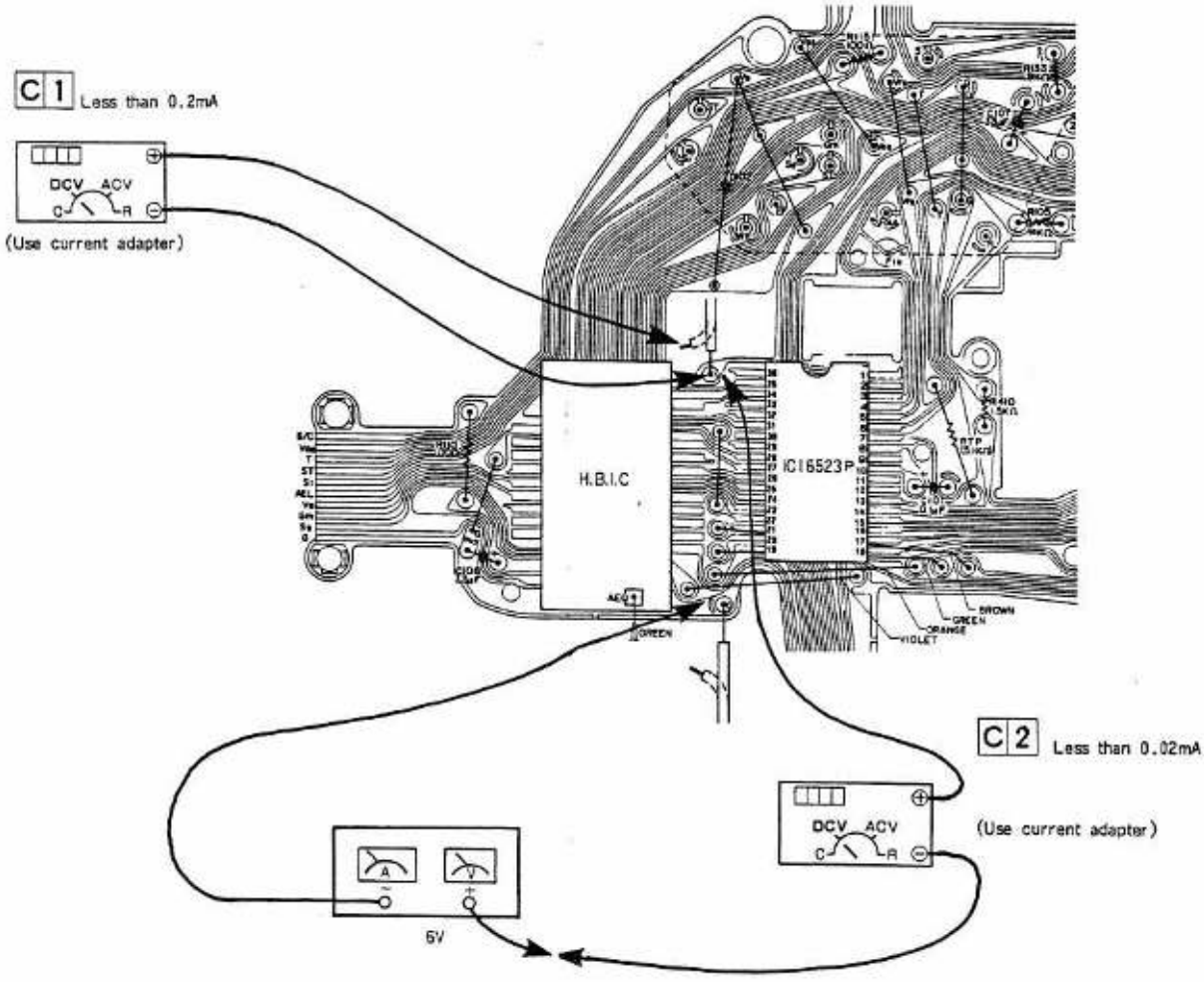

C	Power source	Lead wire	Measuring instrument	Range	Ascertainment
1	Required (6V)	Detach	Digital voltmeter	V	Less than 0.2mA (Use current adapter)
2	Regulated D.C power sapply (6V)	Detach	Digital voltmeter	V	Less than 0.02mA (Use current adapter)

4-11-2 ABNORMAL RUNDOWN OF BATTERY CELLS

Specifications:

Dark current Less than 0.2mA

Less than 20mA (S1 → ON)

C1

LED in the finder turned ON at all times. ..... Refer to "LED in the finder remains turned ON without release button depressed." (4-4-5)

YES

Is battery case normal? NO → The battery case lead wire (N-21) between battery is short circuite. ..... Adjust.

YES

Is AE amplifier normal condition? NO → AE amplifier's (B-25) dark current is abnormal. ..... Replace AE amplifier (801).

Specification:

Less than 0.02mA

C2

YES

Is motor driving amplifier normal condition? NO → Dark current of motor driving amplifier (C-16) is abnormal. ..... Replace motor driving amplifier (803).

Specification:

Less than 0.18mA

YES

Is "plus" electric source short-circuited? YES → Check by the eye and see if VB lead wire (red) is not short-circuited with ground, etc. ..... Resolder or replace lead wire.

→ There is a leakage between flexible printed-circuit board (H-45) and terminals of AE amplifier (B-25). ..... Clean.

NO

GOOD

4-12 AE'S PRECISION

4-12-1 AE LACKS IN PRECISION

Is AE amplifier's VO2 properly adjusted?

- NO → Check voltage at VO2 terminal of AE amplifier. ····· Adjust or replace AE amplifier (801).

  Specification:

  VO2 = 2,797 ~ 2,803V

  C 1

- YES ↓

Is AE amplifier's level properly adjusted?

- NO → Use light source box, check voltage at terminal Fout of AE amplifier (B-25). ····· Adjust or replace AE amplifier (801).

  Factor:

  Light intensity LV12

  Shutter speed 1/250 sec

  Fout = 1.36 ~ 1.44V

  (Standard value at F4 is 1.4V)

  ※ As for LED indication in the view finder, F2.8 or F5.6 is acceptable in place of F4.

  C 2

- YES ↓

Does diaphragm ring smoothly operate?

- NO → Check action of diaphragm ring (J-48), after detach power source and rear blade hooked lever (R-35) and depress diaphragm ring release pin (J-52). ····· Adjust. Refer to "Diaphragm ring does not smoothly operate." (4-2-8)

- YES ↓

C 1 V_{O2}=2.797~2.803V

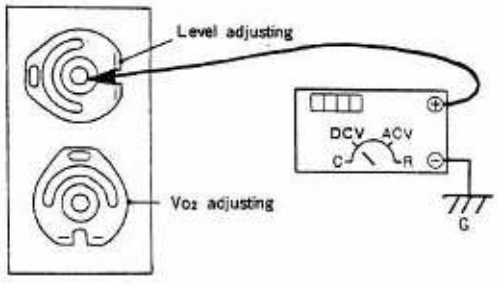

C 2 Fout=1.36~1.44V

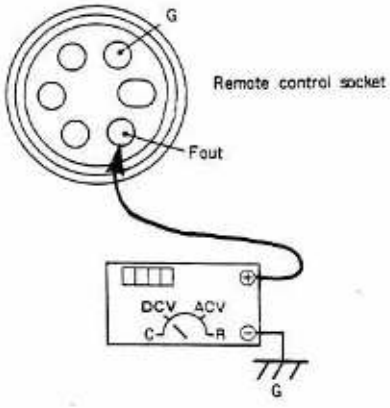

C	Power source	Lead wire	Measuring instrument	Range	Ascertainment
1	Required (6V)		Digital voltmeter	V	2.797~2.803V
2	Required (6V)		Digital voltmeter	V	1.36~1.44V (EV12、1/250)

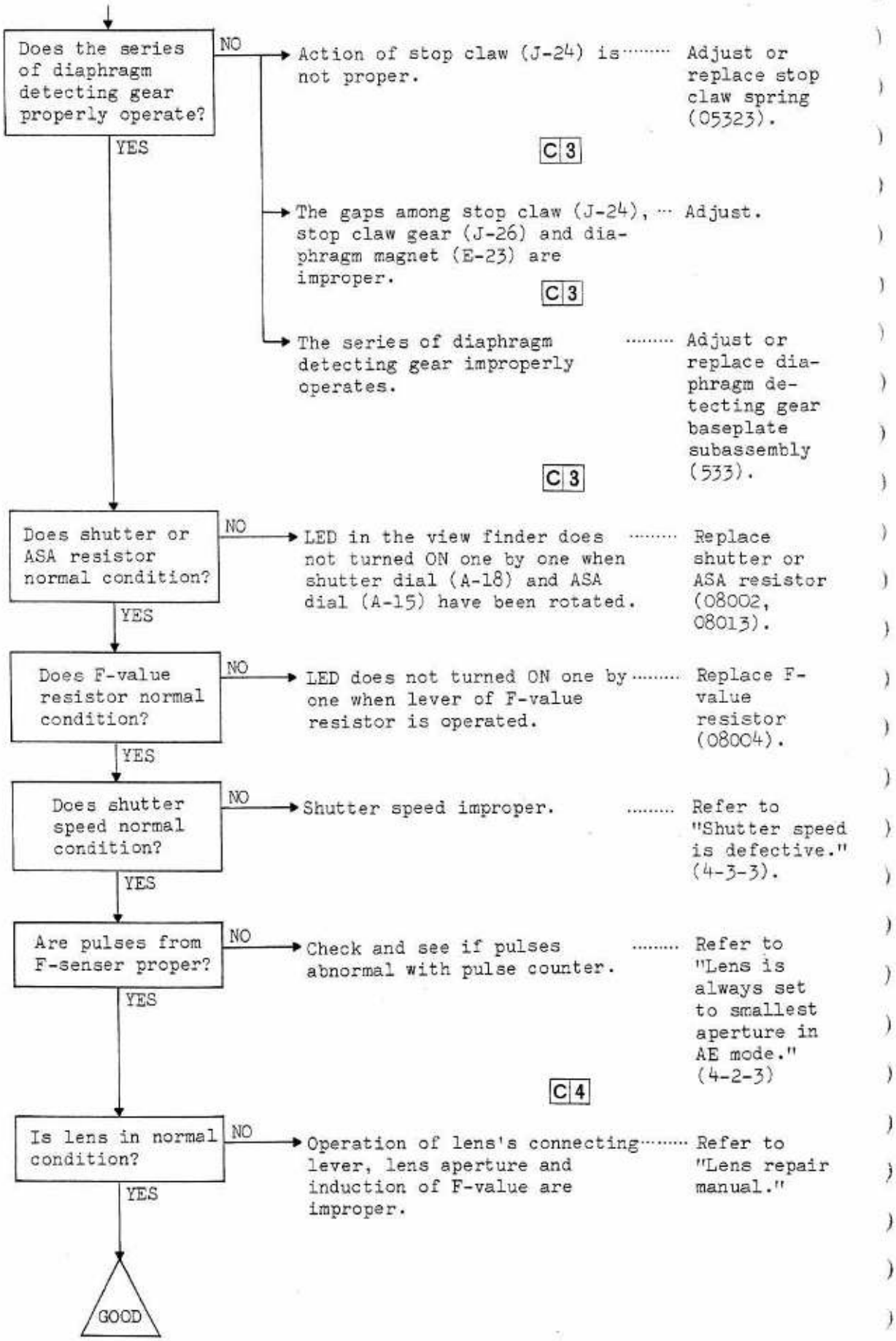
Does the series of diaphragm detecting gear properly operate?
NO
Action of stop claw (J-24) is not proper.
Adjust or replace stop claw spring (05323).
C 3
The gaps among stop claw (J-24), stop claw gear (J-26) and diaphragm magnet (E-23) are improper.
Adjust.
C 3
The series of diaphragm detecting gear improperly operates.
Adjust or replace diaphragm detecting gear baseplate subassembly (533).
C 3
YES
Does shutter or ASA resistor normal condition?
NO
LED in the view finder does not turned ON one by one when shutter dial (A-18) and ASA dial (A-15) have been rotated.
Replace shutter or ASA resistor (08002, 08013).
YES
Does F-value resistor normal condition?
NO
LED does not turned ON one by one when lever of F-value resistor is operated.
Replace F-value resistor (08004).
YES
Does shutter speed normal condition?
NO
Shutter speed improper.
Refer to "Shutter speed is defective." (4-3-3).
YES
Are pulses from F-senser proper?
NO
Check and see if pulses abnormal with pulse counter.
Refer to "Lens is always set to smallest aperture in AE mode." (4-2-3)
C 4
YES
Is lens in normal condition?
NO
Operation of lens's connecting lever, lens aperture and induction of F-value are improper.
Refer to "Lens repair manual."
YES
GOOD

C 3 Visually check

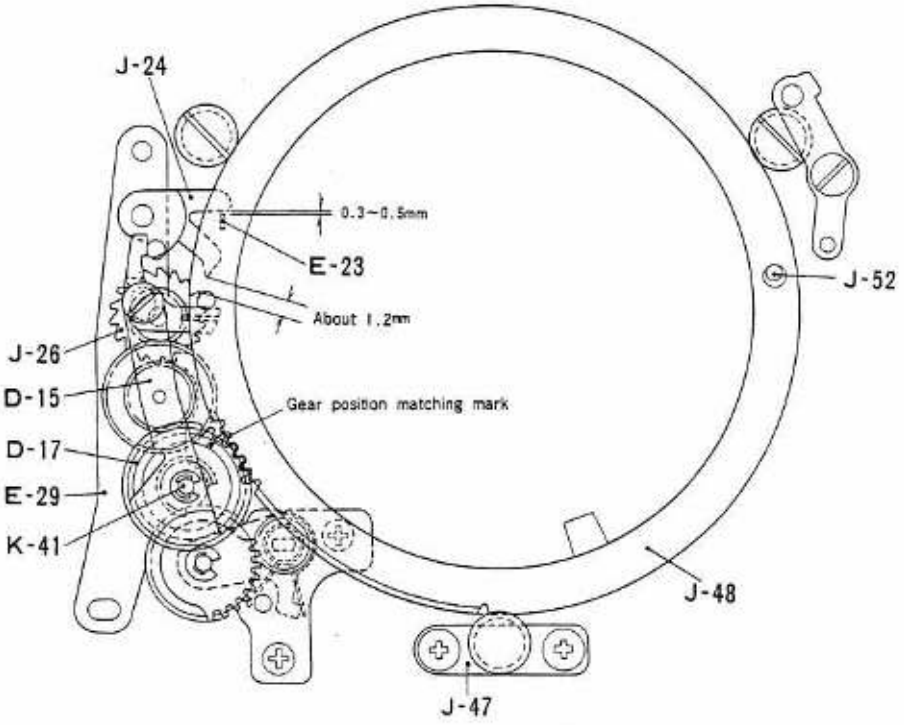

C 4

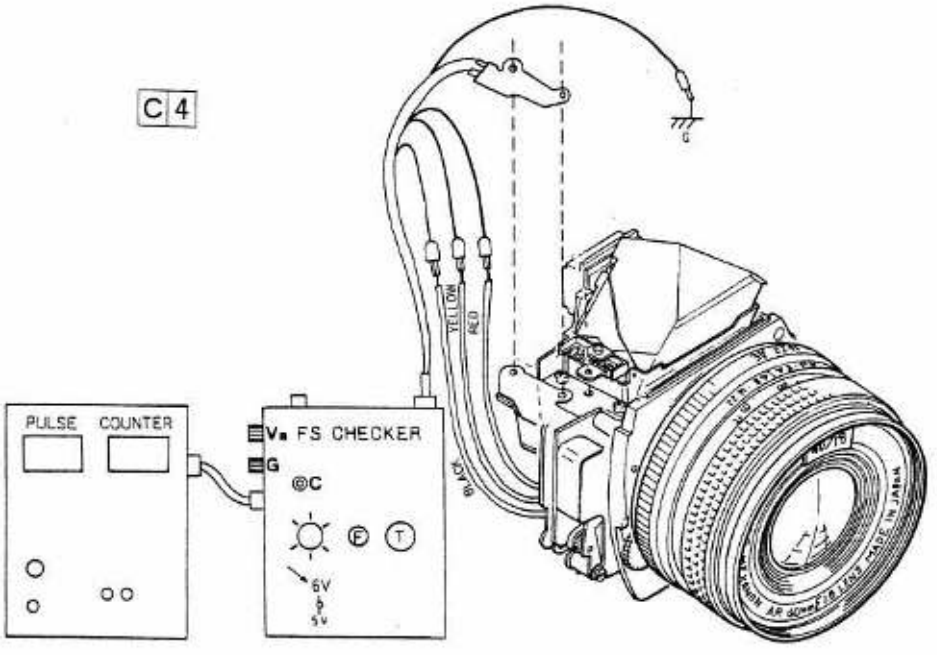

±3 Puls

F-Number	1.4	2	2.8	4	5.6	8	11	16	22
Puls count	10	20	30	40	50	60	70	80	90
Standard voltage (V)	1.10	1.20	1.30	1.40	1.50	1.60	1.70	1.80	1.90

C	Power source	Lead wire	Measuring instrument	Range	Ascertainment
3	Not required				Visually check
4	Not required		FS checker Puls counter	6V	Check the pulse count

5. FT-1 MOTOR OF PRODUCTS STANDARD EXCERPT

Function	Dimensions	Load & Check Point	Operation
Winding	1. The auto winder must start to operate upon backlid closure. It should automatically stops when the counter counts "1". 2. Winding must be unfailingly made at lowest voltage. 3. The film transport indicator mark steadily turns without relation to the speed at which the film is transported.	1. Lowest operating voltage ... 5.35V (Regulated D.C power supply with 3.3 Ω) 2. Picture spacing ... Picture must not overlap each other 3. The film end indicator LED must light up within 2 ±0.6 seconds after the film is stretched out to the full. At the same time, the electric current of the film wind motor must be cut off. The LED must go out when the rewind button has been depressed. 4. Spool friction 150 ~ 250g (Load on outer diameter of reel rubber.)	Operating sequence: i) Mirror resetting. ii) Aperture ring resetting. iii) Shutter charge. iv) Film feeding (winding). Film counter advance v) Winding stop.
Main switch	1. With the electric source turned off, neither the self-timer, release nor the auto-load go into action.	1. Lever's action load At the lever manipulation Section... 50 ~ 500g 2. Electric current consumption OFF position ..... 0 μA ON position ..... less than 0.2mA	1. The action click is steady. 2. The shutter dial must not move when the electric source switch is operated.

Function	Dimensions	Load & Check Point	Operation
Flange to Film	1. Spacing between No.1, 4 rail face and lens mounting side of mount ... 40.66 ±0.02mm 2. Amount of tunnel between No.1, 4 rails and No.2, 3 fails: $0.2^{+0.02}_{-0}$ mm	1. Sprocket plate and set screw must jut out of the picture frame.	
Body Release	Releasing position.	1. Release load .... less than 450g 2. Load difference between exposure position (S1) and release position (S2) must be more than 30g 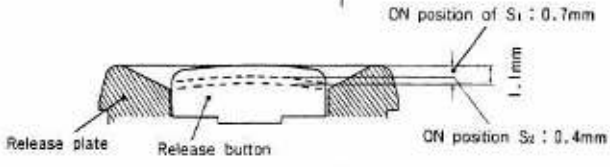 	1. When exposure switch (S1) is turned ON, exposing is initiated, and LED in F lights. 2. When release switch (S2) is turned on: i) Aperture operation ii) Mirror operation iii) Shutter opening & closing iv) Mirror resetting Diaphragm ring resetting v) Shutter charge vi) Winding vii) Winding stop
AE Lock	1. The LED in the view finder must light up when the light metering switch (S1) is moved into action. (At the AEL position)		1. The indicated LED must remain as it is without relation to the shutter speed, film speed and the change in exposure compensation after the action of the metering switch (S1).

Function	Dimension	Load & Check Point	Operation
S/C Change-able		1. Action load ..... 50 ~ 400g	1. The switch must steadily clicks into position at S (single-frame) and C (continuous). 2. The camera must go into action only for one frame with the manipulation of the release button in the S position, and later the camera must not go into action even when the release button is depressed. 3. At position (C), camera operating continuous so long as the release button is kept depress.
Mirror	Mirror angle: 45° ±20'		1. Even if releasing is made with mirror kept lifted up, other mechanism must fully operate. After operation, the mirror must be reset to 45° position without fail. 2. There must not be any difference in posture for the action of the mirror mechanism.
Automatic Aperture Control	Auto-manual change-over pin position. (See Attached Fig. 1)	1. Auto-manual change-over load: less than 50g 2. Aperture ring operation. Aperture ring must unfailingly operates up to F22 with	

<table>
<tr><th>Function</th><th>Dimension</th><th>Load & Check Point</th><th>Operation</th></tr>
<tr><td></td><td></td><td>40g lens and be reset fully with 110g lens.
(Load of body connection lever.)</td><td></td></tr>
<tr><td>F-value Introduction</td><td></td><td>1. F-value lever operation load:
less than 300g</td><td></td></tr>
<tr><td>Shutter Speed Dial</td><td>1. Backlash in the revolving circection of the shutter speed dial
less than 3°
(including click backlash)</td><td>1. Operating torque of speed dial:
200 to 800 g-cm</td><td>1. With the shutter speed dial in operation, the electric source switch lever must not turn.</td></tr>
<tr><td>ASA Dial</td><td>1. Exposure compensation dial:
± 2EV
(ASA100 ~ 800)</td><td>1. ASA dial's action torque:
Less than 300 g-cm
2. Exposure compensation action torque:
500 ~ 1,300 g-cm</td><td>1. The exposure compensation must not indiscreetly move from the 「0」 position.</td></tr>
<tr><td>Exposure</td><td>1. AE accuracy Standard lens (When 50mm F1.8 lens is mounted.)
±0.8 EV
Other replacement lens: ±1.0 EV
2. Accuracy of film sensitivity changeover.
±0.2EV with respect to ASA100 exposure point.</td><td>1. Check Points
ASA100
<table><tr><th>LV</th><th>Shutter Speed</th><th>Reading</th></tr><tr><td>9</td><td>1/60</td><td>F2.8</td></tr><tr><td>15</td><td>1/125</td><td>F16</td></tr></table>
2. Low Brightness Warning
<table><tr><td>Accuracy</td><td>LV9</td></tr><tr><td>Shutter speed</td><td>1/125</td></tr><tr><td>Film sensitivity</td><td>100</td></tr></table></td><td>1. LED lighting in viewfield must be movable at every 1 step at shutter speed and film sensitivity.
2. When lens is switched to manual side, M-LED must flinking.</td></tr>
</table>

<table>
<tr><th>Function</th><th>Dimension</th><th>Load & Check Point</th><th>Operation</th></tr>
<tr><td></td><td></td><td>F2 LED lights in the above condition and low brightness warning must be issued when switched to 1/250.

3. High-accuracy warning

<table>
<tr><td>Brightness</td><td>LV15</td></tr>
<tr><td>Shutter speed</td><td>1/60</td></tr>
<tr><td>Film sensitivity</td><td>100</td></tr>
</table>

In above condition, the F22 LED lights, and high brightness warning must be issued when switching is made to 1/15 sec.</td><td></td></tr>
<tr><td>Shutter</td><td>1. 1/1000 sec. unstable exposure:

±25% or less

2. Shutter speed standard value:

<table>
<tr><th>Speed</th><th>Std. (ms)</th><th>EV conv.</th></tr>
<tr><td>2</td><td>2.462~1.623</td><td>±0.3 EV</td></tr>
<tr><td>1</td><td>1.231~ 812</td><td>〃</td></tr>
<tr><td>1/2</td><td>616~ 406</td><td>〃</td></tr>
<tr><td>1/4</td><td>308~ 203</td><td>〃</td></tr>
<tr><td>1/8</td><td>154~ 102</td><td>〃</td></tr>
<tr><td>1/15</td><td>77~ 51</td><td>〃</td></tr>
<tr><td>1/30</td><td>38~ 25</td><td>〃</td></tr>
<tr><td>1/60</td><td>19.2~ 12.7</td><td>〃</td></tr>
<tr><td>1/125</td><td>9.6~ 6.3</td><td>〃</td></tr>
<tr><td>1/250</td><td>4.8~ 3.2</td><td>〃</td></tr>
<tr><td>1/500</td><td>2.8~ 1.4</td><td>±0.5 EV</td></tr>
<tr><td>1/1000</td><td>1.4~ 0.7</td><td>〃</td></tr>
</table></td><td>1. X-contact delay time

1/100 to 2 sec.

on "B"

1 mS after opening</td><td></td></tr>
</table>

Function	Dimension	Load & Check Point	Operation
Self-timer	1. When the self-timer has been started, it must be released midway with the action of the metering switch (S1).	Self-timer operating load: 70g to 320g	Self-timer operation: 7 to 14 sec.
Rewinding		1. Rewind torque ... less than 1kg.cm (Note: 36-exposure SAKURA COLOR II used)	1. When the rewind button has been depressed, it must steadily lock into position (except cases where the film is wound.) While the film is rewound, the film must not be transported. 2. The rewind button fallen must be retracted to the home position within one rotation of sprocket with the film loaded in the body.
Backlid	Backlid lock back-lash: less than 0.2mm (Note: in center.)	1. Pressure of sticking to the pressure plate's rail plane ..... more than 250g	1. It must be possible to close the backlid even when the lock button is not operated. When the lock button has been operated, the backlid must steadily be opened. 2. The movable hinge shaft must steadily returned to its original position on its own and the back-lid must be detachable from the body's hinge shaft holder.

Function	Dimension	Load & Check Point	Operation
Counter	The counter must advance unfailingly from "S" to "1" when the backlid is closed.		1. The counter must advance one frame whenever picture taking is done. 2. The counter must be cleared when the backlid is opened, with the dial set at any position.
Finder	1. Finder focus (with reference lens) 40.52 ±0.02 2. Viewfield rate the size of finder image frame must be more than 92% on picture side. 3. Shaft runout: within ±100' 4. Image tilt: within ±90' 5. One side vague: ±0.28mm max. (at radius of 18mm on image orthogonal line)		
Battery Check	1. Non-action voltage The self-timer must not go into action when it is released at 15.15 ±0.15V.	Battery check must be indicated at below 5.35V ±0.15	
Synchro Circuit	1. Insulation resistance must be in excess of 30 ohms when checked with a 500V insulation resistor. (Temp. 20° ±15°C, and relative humidity 65% ±20%)	1. When contact point A is shorted to ground with picture-taking in auto mode, a change over must be effected to 1/100 by release switch S1 and viewfield LED 5.6 must flinking.	1. When test is made on 3V DC power supply, (two 1.5V dry cells connected in series), there must be electrical continuity.

Function	Dimension	Load & Check Point	Operation
	2. Shutter speed with dedicated electronic flash mounted 1/100 sec. (9 ~ 12ms)	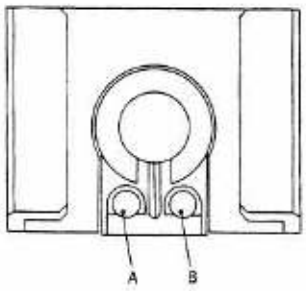 2. When the release switch (S1) is turned on, the voltage between the contact point B and the ground is: 1.2V ±3% with ASA100 1.4V ±3% with ASA400	2. Hot shoe surge preventive contact piece must be turned ON with electronic flash in use and OFF without it.
Battery Case		1. Contact point spring pressure: More than 150g 2. Release load of mounting/dismounting lock: 50 ~ 600g 3. Operating power of mounting/dis mounting button: 100 ~ 800g	1. When the battery case is mounted on the body, it must be steadily mounted without operating the mounting/dismounting button of the battery case. Once mounted, the battery case, must not come off. 2. The batteries must not drop because of their own weight.
Combination of Body and Lens Barrel		Lens barrel mounting and dismounting torque: 5 to 15kg-cm	1. When the aperture of lens barrel is set in AE mode, the AE picture-taking can be made. 2. When AE is released, changeover is made to manual mode, and F-LED "M" must flinking.

Function	Dimension	Load & Check Point	Operation
Other	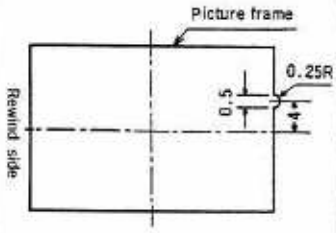		

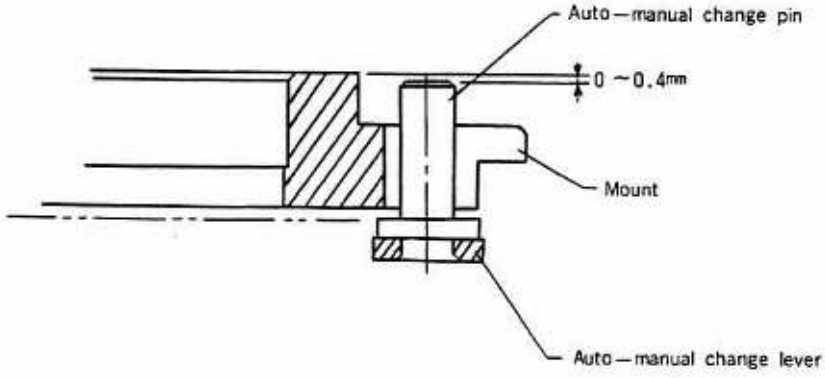
Auto—manual change pin
0 ~0.4mm
Mount
Auto—manual change lever

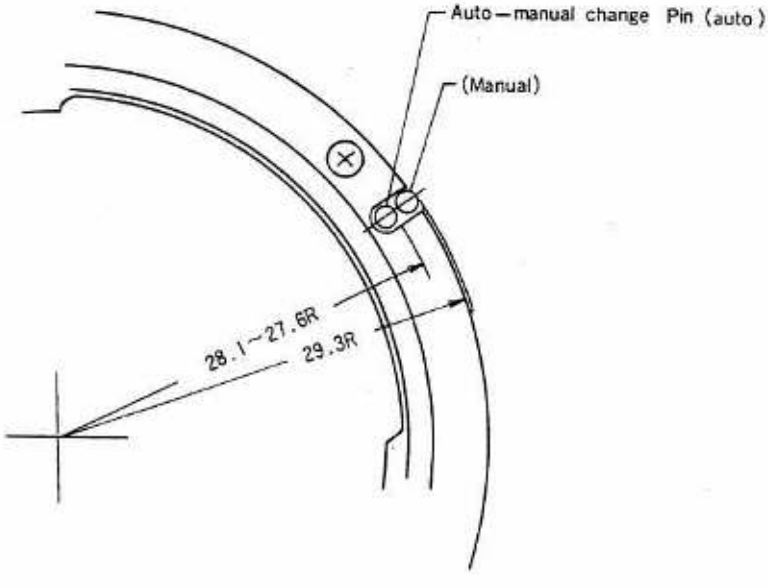
Auto—manual change Pin (auto)
(Manual)
28.1~27.6R
29.3R

Fig. -1